2201M0JE-HO-L-N_2015.02.

MYCOM

Reciprocating Compressor
L-series Instruction Manual

4L/6L/8L

CAUTION

Before operating, inspecting, or servicing the compressor, read this manual thoroughly to fully understand the contents.
Keep this instruction manual in a safe, designated place for future reference whenever the manual is needed.
Specifications of this product and contents of this manual are subject to change without prior notice due to technical improvements.

MYCOM MAYEKAWA MFG. CO., LTD.
3-14-15 Botan Koto-ku, Tokyo 135-8482, Japan

Preface

Thank you for purchasing the MYCOM L-series reciprocating compressor (hereafter referred to as "this product") of MAYEKAWA Mfg. Co., Ltd. (hereafter referred to as "MAYEKAWA" or "Company").

Since the initial production and sales launch in 1955 of the first multi-cylinder high speed compressor, MAYEKAWA has subsequently produced a number of series reciprocating compressor products including the Type A, B, J, C, SF, W, K, M, HK, and HS products.

The L-series compressors have been in production and on sale since 1994, being improved from the Type B products.

This instruction manual (hereafter referred to as "this manual") provides safety information, operating procedures and maintenance procedures for the three models of L-series (4L, 6L, 8L) for the user to be able to sufficiently understand the correct methods of handling this product, in order to safely and effectively use this product.

Please be sure to read this manual carefully before installing or using this product.

Also, please keep this manual at a convenient place near this product installation to ensure that it can be quickly referred to should any unclear issues arise.

Revision History

Title of Instruction Manual		Document No.	Date of Initial Issue
L-Series Instruction Manual		**2201M0JE-HO-L-N_2015.02.**	**October 03, 2014**
Rev. No.	**Issue Date**	**Major Revisions**	**Prepared/Approved by**
-	Mar. 01, 1996	Issued to meet the requirements set forth in the Product Liability Law established in July, 1994.	
00	Oct. 03, 2014	Complete revision and reissue as an electronic manual.	Furudate / Hirao
01	**Feb. 12, 2015**	**Modified the description of Safety Valve in Section 1.4.4 and Section 2.4.7.**	**Ikehara / Muta**

Warranty and Disclaimer

Warranty

If malfunctions or damages occur under proper usage and conditions following documents such as instruction manual or drawings of this product, or, if MAYEKAWA judges that malfunctions or damages are related to design or manufacture of the product, and if the malfunctions or damages are within the warranty period, we will repair or replace the product without any charges.

The warranty period is "12 months from factory shipment of this product". However, if any separate agreement has been concluded, such an agreement will have the priority in principle.

MAYEKAWA is not liable for production or man made disaster compensation due to malfunction or damage of this product.

Disclaimer of Warranty

Although MAYEKAWA warrants the clauses mentioned above, the following clauses are exempted.

- Malfunction or damage of this product caused by natural disaster, or other accidental forces (such as fire, thunderbolt, windstorm, intense rainfall, flood, tidal wave, earthquake, land subsidence, etc.).
- Malfunction or damage caused by misusage described below.
  - Malfunctions, damage, or deterioration of this product due to abnormal or improper use (including improperly storing this product outdoors or under too hot/humid conditions, unexpected inspections, tests, operations, too frequent liquid flow-back operation*, and too frequent start-stop cycles, etc.).
  - Malfunction or damage caused by devices or equipments not provided by MAYEKAWA including operation control methods of those devices.
  - Malfunction or damage caused by refrigerants, gases, or refrigerant oils, and operating conditions (design conditions) not approved for this product.
  - Malfunction or damage caused by maintenance or inspection not recommended by MAYEKAWA.
  - Malfunction or damage caused by parts that are not MYCOM genuine.
  - Malfunction or damage caused by remodeling the product without approval of MAYEKAWA.
  - Malfunction or damage caused by unexpected misusage

"Liquid flow-back operation" is ･･･

Normally, while the compressor sucks in the refrigerant liquid only after vaporizing it in the evaporator, it may directly sucks it in because of the faulty adjustment or failure of the expansion valve. We call this state of compressor operation "liquid flow-back operation".

No compressor can compress a liquid. The compressor may be damaged should the liquid be sucked in.

Important Information

Intended Use of this Product

This product is a general purpose reciprocating compressor to be used for refrigeration, cold storage, or air conditioning. Do not use this product for any purposes other than the intended use or outside the scope of the specification. Refer to Chapter 2, Section 2.3 "Compressor Specifications" of this manual for the specification of this product.

In addition, it is requested that the maintenance actions described in this manual be taken using safe and secure procedures.

Precautions for Safe Use of this Product

Although MAYEKAWA has paid a lot of attention to safety measures for this product, all hazards including potential hazards caused by human errors, or due to environmental conditions cannot be anticipated.

In using this product, there are many things that are to be strictly followed or prohibited. However, it is impractical to communicate all of such matters in this manual or using warning labels. As such, in addition to the precautions provided in this manual, the user is required to consider other safety measures that are generally required.

The following points are important work safety suggestions for everyone including the manager, supervisor, and other personnel who may work on this product.

Before using this product, please read this manual carefully to sufficiently understand the details and securely implement the safety procedures described in this manual.

- The operation, maintenance, and inspection must be performed by a qualified person who has been provided with the basic technical knowledge on this product and trained on the potential risks and how to avoid the risks.
- Anyone other than the ones who have been provided with the basic technical knowledge on this product and trained on the potential risks and how to avoid the risks is not allowed to approach this product while it is operating or during maintenance.
- Be sure to comply with the applicable laws and regulations of the government and administrative organizations.
- To prevent accidents, do not use this product for any purpose other than the ones originally intended or perform operation/maintenance work in a manner not described in this manual.
- Be sure to use only MYCOM genuine parts for replacement.
- Both the operators and the responsible supervisor are requested to participate together in the health and safety related activities in their efforts to prevent accidents.
- Whenever it is necessary to close (or open) any valve of the package unit, be sure to use the lock-out and tag-out procedures to prevent accidental closure (or opening) of the valve during the work.

"Lock-out" is to prevent people other than the worker from using the item by locking it.

The term "lock-out" refers to the action to shut down (or keep shutting down) the source of (driving) energy to be supplied to the machine or equipment by locking the relevant device.

"Lock-out" is not complete by only turning off the switch of the power source to cut the energy supply. It means that a locking device must be used to lock (fix) the switch, valve, or other device in the shut-off position to prevent further operation by others.

The term "lock-out device" refers to a lock, cover, latch, or other device used to fix the switch, valve, open/close lever, or others securely in the shut-off position.

"Tag-out" is to prevent improper work of other people by attaching a tag plate that indicates "work in progress", for example.

"Tag-out" is to place a tag that clearly indicates that it is prohibited to operate the energy cut-off device while the (driving) energy source is being shut down. Such a marking tag is intended to give a warning that the energy source cannot be operated, by clearly marking "Operation Prohibited", "Startup Prohibited", "Do not open", etc., and it is not intended to actually operate the cut off device.

Be sure to strictly observe the following instructions regarding the maintenance work on the electric control:

- The work must be performed by a qualified person who has been trained on the electric control of the particular target system as well as on the potential risks inherent to electric control and how to avoid the said risks, on top of the generally required knowledge on electrical work.
- Whenever servicing or inspecting electric machinery, be sure to cut off the motor main power and control power, implement lock-out and tag-out procedures, and prevent any accidental application of power during the work.

However, it should be noted that the system may be energized from other sources even if the motor main power and control power are cut off, if power is supplied externally, i.e., not from the refrigeration/cold storage unit that uses this product. In such a case, be sure to cut off the power supply source, implement lock-out and tag-out procedures, and prevent any accidental application of power during the work.

About this Manual

- This product is subject to continuous development and improvement without prior notice. Accordingly, the details provided in this manual may partly differ from the actual condition. If any problem is found during work, please contact one of our sales or service establishments. For each sight of MAYEKAWA, refer to "Contact Information" in this manual or following URL. http://www.mayekawa.com/about/network/
- This manual is in English. If any other language is required, it is the customers responsibility to prepare a manual for safety education and operation instructions.
- MAYEKAWA owns the copyright of this manual. Any part of relevant drawings and technical documents, including this manual, may not be copied in any possible way, including the use of electronic media, without written consent of MAYEKAWA.
- The pictures and illustrations in this manual may not accurately represent the actual condition of the product.
- In case this manual is lost or damaged, please promptly place an order for the copy to one of our sales or service offices. The use of this product without this manual can be a cause of possible accidents.
- When you sell this product, be sure to transfer this manual to the next owner.

Structure of this Manual

Chapter/Section Title	Description
Preface	Describes the outline and usage of this manual.
Warranty and Disclaimer	The scope of warranty by the Company is described. Provides disclaimer of warranty for the issues outside the scope of warranty.
Important Information	Provides important information on the product as well as on this manual.
1. Safety	Safety information for the operator, safety measures used for this product, and work safety management required in using this product are described.
2. Compressor Specifications and Structure	Major components of this product, their functions, specifications, and service limits are described.
3. Installation	The installation procedures for this product are described.
4. Operation of Compressor and System	Precautions for the use of this product are described.
5. Maintenance and Inspection	Inspection points, inspection interval, and disassembly/assembly procedures for this product are described.
6. Troubleshooting	Major problems that may be experienced during the use of this product are listed together with the corresponding behavior and actions to take.
7. Related Documents	Parts development view, Parts configuration table, and other materials are provided.
Contact Information	Information on our sales and service offices is provided for the customer to contact us.

Table of Contents

Chapter 2 Compressor Specifications and Structure

Chapter 3 Installation

Chapter 4 Operation of Compressor and System

Chapter 5 Maintenance and Inspection

Chapter 6 Troubleshooting

Chapter 7 Related Documents

Contact Information

Chapter 1 Safety

1.1 Strict Requirements and Prohibitions

1.1.1 Strict Requirements (Do's)

1.1.1.1 Do's on Operation

- Each unit must be installed with necessary safety devices and protection systems.
- The safety devices and protection systems must be regularly checked for their normal operation.
- If any safety device or protection system does not function normally or this product operates in an abnormal manner, immediately stop the work and contact your supervisor. When the system is to be restarted, you must observe the decision and instruction of the supervisor.
- If this product has stopped operation due to an unknown cause, immediately contact your supervisor. Before restarting the system, you must seek the decision and instruction of the supervisor.
- Depending on the type of refrigerant used, its leakage may generate a bad smell or poisonous gas.Be sure to sufficiently ventilate the room, especially while the machine is operated.
- Regarding the characteristics of the refrigerant and lubricant, e.g., corrosiveness, degradability, and toxicity, be sure to obtain the safety data sheet (SDS) of them and follow the instructions given.
- When this product is not to be used for some period of time, close the suction (side) and discharge (side) stop valves and shut off the motor power source, heater power, and control power.

1.1.1.2 Do's on Maintenance

- Prepare work procedures according to the work plan, and be sure to conduct appropriate hazard prediction activities before actually start working on the system.
- If two or more people are to work together, be sure to mutually check the work details and procedures before the work. During the work, always keep track of the other workers' actions.
- Before working on any problem encountered during operation, before setting up this product, before cleaning work, and before conducting maintenance or inspection work, be sure to shut off the motor power source, control power, and power to other equipment, perform lock-out and tag-out procedures, and take effective measures to prevent any accidental power-on during the work.
- Before working on any problem encountered during operation, before setting up this product, before cleaning work, and before conducting maintenance or inspection work, be sure to check that the internal pressure of this product and the refrigeration/cold storage unit is at the atmospheric pressure.
- Depending on the type of refrigerant used, it may generate a bad smell or poisonous gas or could cause an oxygen deficient atmosphere. Before starting the work, measure the oxygen content in the work area, as appropriate, and provide sufficient ventilation.The ventilation must be continued steadily until the work is completed.

- Regarding the characteristics of the refrigerant and lubricating oil, e.g., corrosiveness, degradability, and toxicity, be sure to obtain the safety data sheet (SDS) of them and follow the instructions given.
- After work, the tools used must be returned to the predefined location. Be sure not to leave them inside the package unit.

1.1.1.3 Do's on Lock-out/Tag-out Procedures after Power is Off

- A lock-out/tag-out mechanism must be installed for the main circuit breakers that supply power to the motor and power to the control system. The lock-out/tag-out after power down is a very effective means to ensure the safety when two or more workers are working on the system at the same time, as it can prevent possible injury of workers that may be caused by accidental power-on of the driving source by one of the workers.
- If there is a risk of danger, especially during cleaning, maintenance/inspection, or troubleshooting work, be sure to let the workers perform the lock-out/tag-out procedures after the motor main power and control power has been shut off.
- Because the workers may neglect to perform the lock-out/tag-out procedures or cut-off the power in the following situations, be sure to instruct them to strictly follow the correct procedure by clearly identifying the work that require lock-out/tag-out and the reasons why it is needed.
  - As it is a cumbersome task for the workers to cut off the motor main power and control power and use lock-out/tag-out devices before starting the work, they might neglect to do it.
  - The workers might determine by themselves that it should be OK just to cut off the motor main power and control power, and not to use any lock-out/tag-out devices.

1.1.1.4 Do's on Personal Protective Gear

- The work must be performed by preparing or using the personal protective gear that conforms to the applicable legal requirements and safety standards.
- Before use, each personal protective gear must be checked for proper functioning.
- Wear designated regular working wear or uniform and securely fasten the cuff buttons.
- Do not wear a tie or other accessories that may get caught by a moving or rotating part.
  Wear a helmet as your hair may also get caught.
- Do not put things in your pocket for not to drop them into the compressor package unit.

1.1.1.5 Do's in Handling of Hazardous and Toxic Substances

- For each of the hazardous and toxic substances, obtain the safety data sheet (SDS) from the manufacturer.
  Carefully check the details of the safety data sheet (SDS), handle the material according to the recommended handling procedures provided by the manufacturer, and keep the SDS in storage.

1.1.1.6 Do's on the Response to Emergency Situations

- Develop an emergency action plan according to the applicable legal requirements and post it at a safe place.

1.1.1.7 Do's on the Disposal of Waste Oil, Waste Liquid, Scraps, etc.

- Disposal of the refrigerant, oil, and other materials used in this product is restricted in various ways in terms of environmental protection. Be sure to dispose them at the designated site using specified procedures by observing the rules set forth by the applicable laws, regulations, and any voluntary regulations of the customer.

1.1.1.8 Other Do's

- The entire floor around the refrigeration/cold storage unit must always be kept clean, and safety passages must be provided.
- During work, walk only on the above mentioned safety passages. Note that the safety passages must always be kept free from hindrances such as tools, cleaning liquid, etc.
- When water or oil is spilled onto this product or on the floor, immediately wipe it off for not to cause someone to slip and be injured.

1.1.2 Prohibitions (Don'ts)

- Never remove or reposition any safety device based on your own judgment, including any modification of electrical interfaces.
- Never disable the function of safety devices by short-circuit connections or bypassing the circuits without prior permission.
- Never leave this product in an unsafe condition by removing a safety cover, etc.
- Do not touch, clean, or lubricate any moving part of this product.
- While power is turned on, never touch any energized part such as a relay terminal or terminal block by bare hand.

1.2 Warning Notices in This Manual

The warning notices given in this manual inform the user of any dangerous situation that may be expected during the work using the four categories as listed in the following table.

Ignorance of these warnings can lead to a significant personal injury, and in some extreme cases, it could lead to loss of life.

In addition, the main unit or any accessory equipment may be severely damaged. Be sure to observe the instructions in the warning notice.

Table 1-1 Warning Types and their Meanings

Type	Meaning
DANGER	Indicates that there is a high risk of death or severe injury if it is not avoided.
WARNING	Indicates that there is a potential risk of death or severe injury if it is not avoided.
CAUTION	Indicates that there is a risk of light or medium injury if it is not avoided.
CAUTION	Indicates that there is a potential risk of physical damage if it is not avoided.

1.3 Residual Risks

The following information is provided assuming that this product will be operated, inspected, and maintained while it is used in a general refrigeration, cold storage, or air conditioning system. However, it is impossible for us to foresee all hazardous sources in the particular refrigeration, cold storage, or air conditioning system that the customer will actually use.

As such, the customer is requested to take proper measures regarding the possible hazardous sources.

Table 1-2 Hazardous Sources

	Hazardous Area	Predicted Hazard	Actions to Take During Operation	Actions to take During Cleaning, Inspection, or Parts Replacement
A	Driving Section	• Contact with or getting caught in a rotating part • Falling off of moving part • Recovery after interruption of energy supply	• Installation of a guard, cover, or other protection ~~device~~ gear	• Lock-out/tag-out for the motor main power and control power
B	Head Cover	• Getting a burn by touching it when it is hot	• Installation of a guard or other protection • Wearing a personal protection gear	• Wearing a personal protection gear • Perform the work only when the temperature is 40°C or less
C	Discharge pipe	• Getting a burn by touching it when it is hot	• Installation of a guard or other protection • Wearing a personal protection gear	• Wearing a personal protection gear • Perform the work only when the temperature is 40°C or less
D	Unloader solenoid valve	• Electric shock	• Installation of a guard or other protection • Wearing a personal protection gear	• Lock-out/tag-out for the control power
E	Heater	• Electric shock • Burn	• Installation of a guard, cover, or other protection gear • Wearing a personal protection gear	• Lock-out/tag-out for the power to the heater • Wearing a personal protection gear • Perform the work only when the temperature is 40°C or less
F	Suction (side) stop valve	• Contact with or inhalation of hazardous material • Low temperature burn	• Wearing a personal protection gear • Sufficient ventilation • Installation of a guard or other protection	• Wearing a personal protection gear • Sufficient ventilation

Table 1-2 Hazardous Sources (continued)

	Hazardous Area	Predicted Hazard	Actions to Take During Operation	Actions to take During Cleaning, Inspection, or Parts Replacement
G	Discharge (side) stop valve	• Contact with or inhalation of hazardous material • Burn	• Wearing a personal protection gear • Sufficient ventilation • Installation of a guard or other protection	• Wearing a personal protection gear • Sufficient ventilation • Perform the work only when the temperature is 40°C or less
H	Gas purge valve	• Contact with or inhalation of hazardous material	• Wearing a personal protection gear • Sufficient ventilation	• Wearing a personal protection gear • Sufficient ventilation
I	Oil drain	• Burn • Contact with hazardous material	• Do not touch while in operation	• Wearing a personal protection gear • Perform the work only when the temperature is 40°C or less
J	Noise	• Hearing impairment due to loud noise	• Wearing a personal protection gear	—
K	Motor	• Getting a burn by touching it when it is hot • Electric shock	• Wearing a personal protection gear	• Lock-out/tag-out for the motor main power and control power • Wearing a personal protection gear • Perform the work only when the temperature is 40°C or less

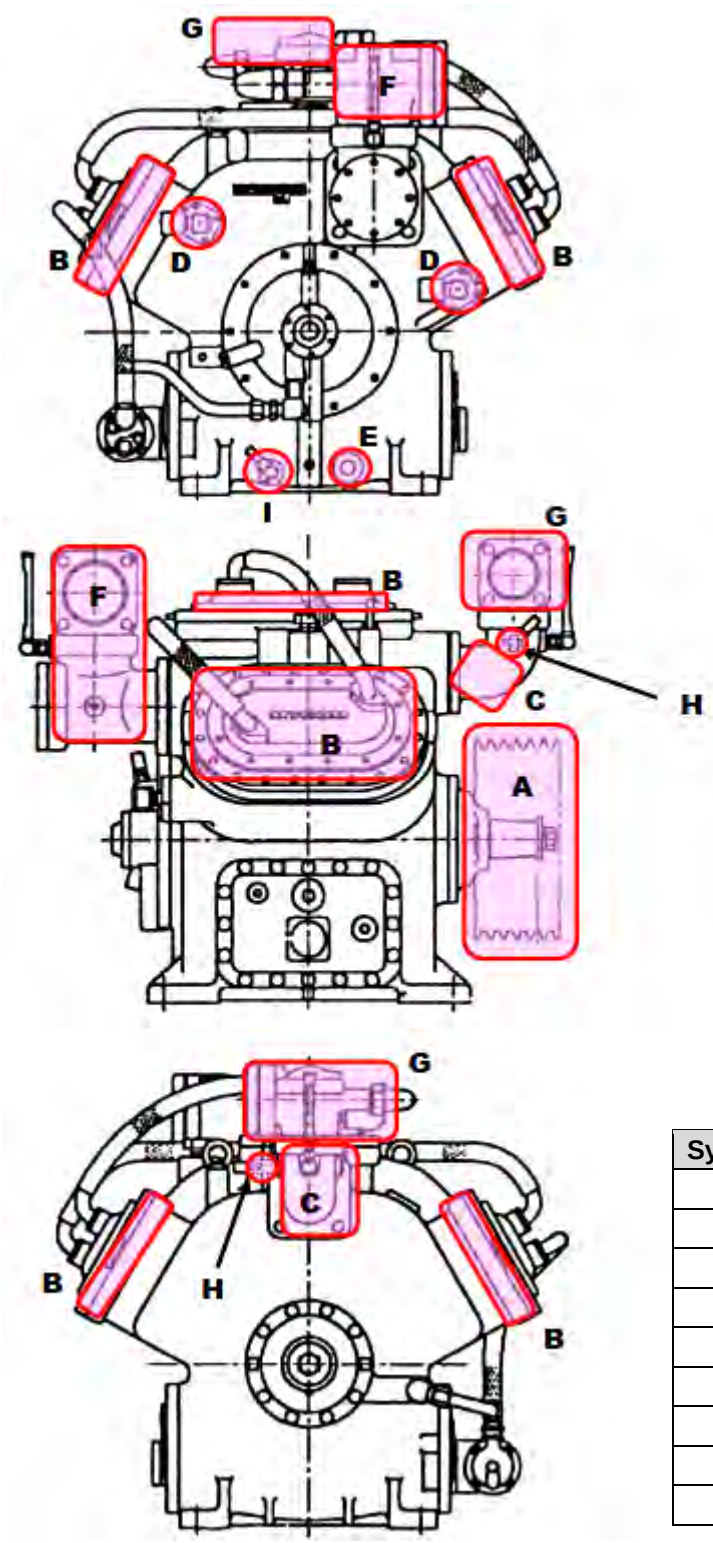

Symbol	Hazardous Area
A	Driving Section
B	Head cover
C	Discharge pipe
D	Unloader solenoid valve
E	Heater
F	Suction stop valve
G	Discharge stop valve
H	Gas purge valve
I	Oil drain

Figure 1-1 Hazardous Sources (ex.: 6L)

1.4 Safety Devices

For the safe use and protection of this product, necessary safety devices must be equipped to your package unit as required by the applicable laws and regulations and according to the following descriptions.

To keep the safety devices in a normal condition at all times, proper and regular maintenance and inspection are essential. Accordingly, it must be treated as one of the essential tasks in the maintenance and inspection activities for the package unit. Be sure to provide the user of this product with sufficient information regarding the type of safety devices used their locations, functions, and how to inspect such safety-related devices.

WARNING

- **The safety devices must be checked for normal operation after this product is powered on and before starting the operation. If any of the safety devices does not function normally, a corrective action must be taken at once.**

1.4.1 Emergency Stop Button

■ Overview, functions, and objectives

This button is used for emergency shutdown of this product when an emergency situation arises.

■ Installation location

At the local control panel and in the operation control room

■ Stopping and recovery methods

The operating procedures for the emergency stop button, i.e., how to stop the operation and restore the normal operating condition, must be clearly defined and the information provided to the user of this product.

■ Inspection method and inspection interval

The emergency stop button must be tested for normal operation before each commission and at regular interval. The inspection procedures and the inspection interval for the emergency stop button must be clearly defined and the information provided to the user of this product.

1.4.2 Circuit Breakers for the Motor and Controller Power Sources (Use of Lock-out/Tag-out Mechanism)

■ Overview, functions, and objectives

If there is a risk of danger due to accidental power-on of the drive system during the work being conducted after the motor main power and control power have been shut off, e.g., during cleaning, maintenance/inspection, or troubleshooting work, it is necessary to install a lock-out/tag-out mechanism to the circuit breakers of the motor main power and control power in order to prevent possible injury of the workers.

■ How to implement and restore the lock-out/tag-out function

The methods of implementing and restoring the lock-out/tag-out function must be sufficiently communicated to the user of this product by clearly describing the said methods by referring to the relevant specifications provided by OSHA (Occupational Safety & Health Administration) or others.

■ Inspection method and inspection interval

The inspection procedures/interval of the circuit breakers must be clearly defined and the information provided to the user of this product.

1.4.3 Safety Cover (Driving Section)

■ Overview, functions, and objectives

The safety cover is used to prevent the workers from contacting with or getting caught in the driving section of this product.

■ Installation location

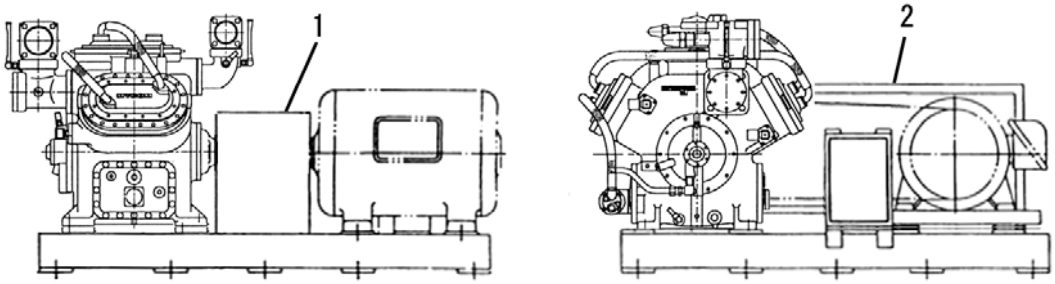

No.	Name
1	Safety cover (for direct drive)

No.	Name
2	Safety cover (for belts drive)

Figure-1-2 Example Installation of the Safety Cover for the Drive System (6L)

■ Inspection method and inspection interval

The inspection procedures and the inspection interval for the safety cover must be clearly defined and the information provided to the user of this product.

1.4.4 Safety Valve

■ Overview, functions, and objectives

The safety valves are used to prevent rupture of the compressor when the internal pressure of the compressor becomes excessively high.

■ Installation location

L-series have two types of safety valves depending on customer requirement specifications. They are a internal built-in type and a external installing type. The current standard is the external installing type.
The internal built-in type is installed in the compressor discharge side, while the external installing type is not installed at the time of compressor shipment.
In the case of external installing type safety valve specifications, the safety valve on the discharge side must be installed between the compressor and the stop (service) valve. It must be functional even when the service valve is fully closed while the compressor is operated.

⚠ WARNING

- **The discharge side of the safety valve must be properly processed according to the applicable laws and regulations for the refrigerant type.**
  If ammonia gas is released in the air, it is likely to cause health damage such as intoxication or bad smell. If the gas is discharged into a closed space such as a machine room, it can cause a significant accident such as oxygen deficit.

■ Setting

The set pressure of the safety valve must be at or below the design pressure of the compressor. The set pressure of the safety valve must be clearly specified and the information provided to the user of this product

■ Inspection method and inspection interval

The safety valve must be tested for normal operation before each commission and at regular interval. The inspection procedures and the inspection interval for the safety valve must be clearly specified and the information provided to the user of this product.

1.4.5 Automatic Control and Protection Devices of the Compressor

■ Overview, functions, and objectives

- Low oil pressure protection device (OP)

  When the oil pressure of the compressor (i.e., the oil pressure gauge reading minus the suction pressure) is reduced due to insufficient amount of the lubricating oil, clogging of the filter, and/or mixing of refrigerant into the lubricating oil, the motor drive circuit will be automatically shut down to stop the operation of the compressor.

- Abnormal high pressure protection device (HP)

  When the discharge pressure of the compressor becomes extremely high due to misoperation of the compressor, no water in the condenser, etc., this device will automatically cut off the motor circuit to stop the operation of the compressor.

- Compressor capacity control: Low pressure control device (LP)

  For a compressor, the number of cylinders determines the number of capacity control stages.

  In principle, the capacity is controlled for each bank consisting of two cylinders. Thus, if the compressor has 8 cylinders, the capacity control can be made at 4 stages. Similarly, 6 (4) cylinder compressors can have 3 (2) stages for capacity control.

  There are two methods of capacity control, i.e., one is to automatically control the capacity by detecting the suction pressure and the other is to manually control the capacity.

  The automatic capacity control uses the signal detected by the low pressure control switch to open or close the solenoid valve in the hydraulic path. This will operate the unloader piston, which is the mechanism to control the capacity of the compressor. For the operation sequence, refer to Chapter 2, Section 2.1.4.2 "Layout and Operation Sequence of the Unloader " in this manual.

■ Connecting point

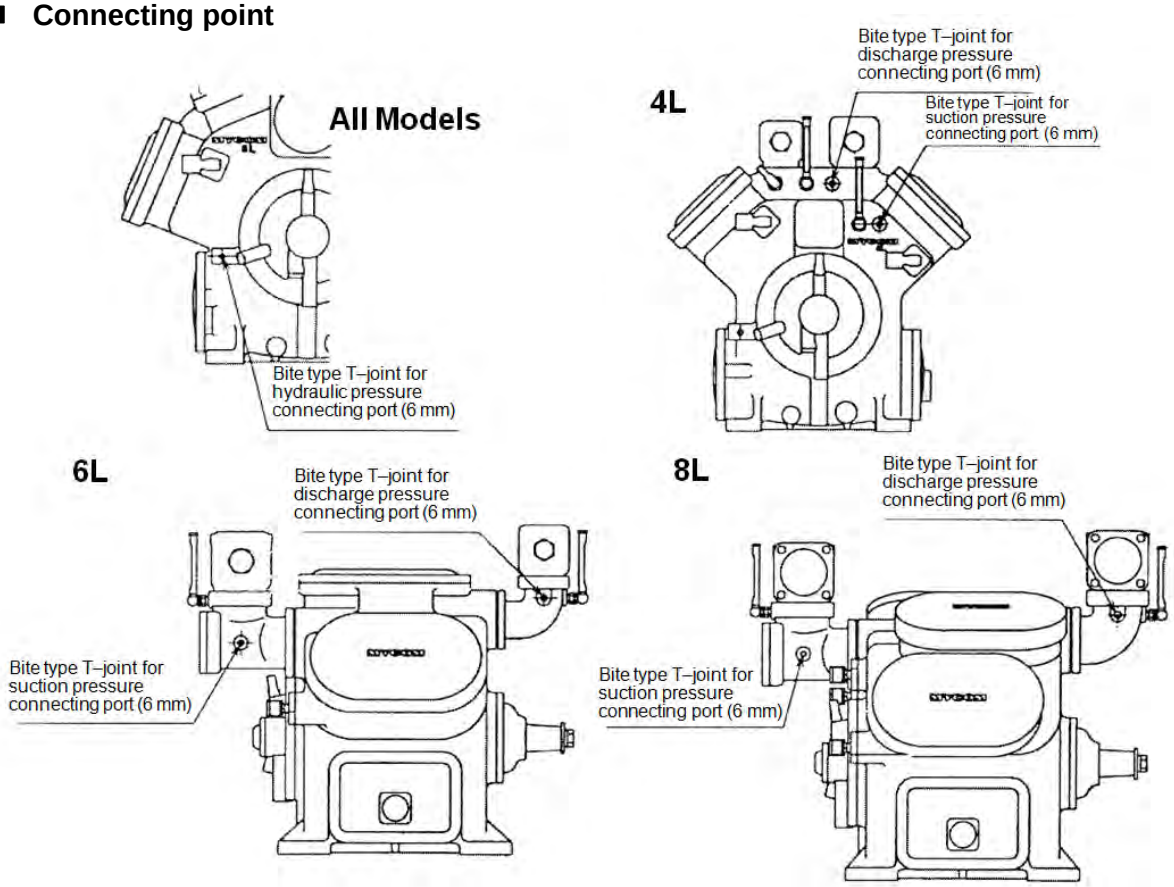

Figure 1-3 Pressure Detection Point

■ Setting

The setting of low oil pressure protection (OP), abnormal high pressure protection (HP) and low pressure control (LP) must be clearly specified by referring to the following table and the information provided to the user of this product.

Table 1-3 Example Settings

Device	Operate (ON)	Release (OFF)	Timer	Recovery
Low oil pressure protection device (OP)	Low pressure +0.15 MPa	Low pressure + 0.17 MPa	30 sec.	Automatic recovery
Abnormal high pressure protection device (HP)	2.0 MPa or less*	—	None	Manual recovery
Low pressure control device (LP)	Depends on the refrigerant used and the system.			Automatic recovery

【NOTE】

- Set the operating point for the abnormal high pressure protection device (HP) at a pressure lower than the safety valve starting pressure. It is recommended that it is set to a value any abnormality can be quickly detected, considering the refrigerant used and the system characteristics.
  In addition, if the pressure is electrically measured and a control circuit (e.g., programmable logic controller) is used to generate the alarm, it is recommended to generate a pre-alarm when the pressure gets near the abnormal level.

■ Inspection method and inspection interval

Each compressor protection device must be checked for the settings and tested for normal operation before starting or operating the compressor and must be periodically re-tested after that.

The inspection procedures and the inspection interval for each compressor protection device must be clearly specified and the information provided to the user of this product.

CAUTION

- **For the operational test, use a pressurization tester or other device to confirm that the alarm and/or switch are normally operated. Never operate the compressor in a dangerous condition, such as when the valves are fully closed.**

CAUTION

- **If the low oil pressure protection device (OP) or high pressure protection device (HP) is operated, the cause of the operation must be removed before recovery to the normal operation.**

1.4.6 No Water Alarm

■ Overview, functions, and objectives

This alarm is used to prevent possible overheating of the head cover and/or lubricating oil due to the inoperability of the water-cooling head cover and/or water-cooling oil cooler.

■ Installation location

Cooling water system

■ Setting

The no water alarm setting must be clearly specified and the information provided to the user of this product.

■ Inspection method and inspection interval

The no water alarm must be tested before commissioning and must also be periodically re-tested after that. The inspection procedures and the inspection interval for the no water alarm must be clearly specified and the information provided to the user of this product.

1.4.7 Oil Heater and Thermal Switch

CAUTION
● **If the oil heater and the thermal switch is not dipped in oil when it is powered, the heater can be easily overheated and broken (heating with no oil). Always carefully check the oil level before applying power to the heater.**

■ Overview, functions, and objectives

The oil heater is a cartridge-type sheath heater. It is a pressure-resistant sealed type heater, with the heating wire covered by insulators and the outside of the unit is sealed by a stainless tube, and is designed to maximize the heat dissipation area.

The oil heater is used to prevent excessive mixing of the refrigerant into the oil as well as to prevent possible condensation of the refrigerant in the crank case while the compressor is not operated. As such, it is used only while the system is not operated (not used during operation).

■ Installation location

The thermal switch used to control the temperature of the heater is mounted inside the heater. The temperature setting dial can be checked by opening the heater cover.

■ Setting

The thermal switch setting must be clearly specified and the information provided to the user of this product.

■ Inspection method and inspection interval

The thermal switch must be tested before commissioning and must also be re-tested after that.
The inspection procedures and the inspection interval for the thermal switch must be clearly specified and the information provided to the user of this product.

Chapter 2 Compressor Specifications and Structure

2.1 Overview of L-series Compressors

MYCOM The L-series reciprocating compressors have the reciprocating piston mechanism and are designed to be compatible with various types of refrigerant. This series includes three models (4L, 6L and 8L), based on the number of cylinders.

These models, featured with a compact profile, light weight and high-speed performance, correspond to the MYCOM B/WB-series in capacity and can be directly driven by a 4-pole motor or a diesel engine.

Moreover, this series has less external piping as the capacity control hydraulic piping and lubricant piping are all incorporated in the compressor, thus achieving a neat appearance and facilitating maintenance work around the unit.

2.2 Model Designation of the Compressor

The meaning of the type designation stamped on the nameplate of the compressor MODEL column is as follows.

[1]	[2]	[3]		[4]
N	6	L	—	HS

[1] Working fluid（refrigerant）

Symbol	Meaning
N	Ammonia (NH_3)
F	Fluorocarbon refrigerant

[2] Number of cylinder

Symbol	Meaning
4	4 cylinders
6	6 cylinders
8	8 cylinders

[3] Series name

Symbol	Meaning
L	L-series

[4] Option

Symbol	Meaning
Non	Standard specifications
HS	Specification with head springs

Note: HS specification is an optional set for only ammonia refrigerant.

2.3 Compressor Specifications

2.3.1 Standard Specifications

Table 2-1 Standard Specifications of the L-series Compressors

Item			4L	6L	8L
Refrigerant		-	NH_3, Freon		
Structure		-	Open reciprocating type		
Cylinder bore		mm	115		
Stroke		mm	90		
Number of cylinders		-	4	6	8
Rotation speed		min^{-1}	970 to 1750		
Displacement	970 min^{-1}	m^3/h	217.5	326.3	435.0
	1170 min^{-1}	m^3/h	262.4	393.5	524.7
	1450 min^{-1}	m^3/h	325.2	487.7	650.3
	1750 min^{-1}	m^3/h	392.4	588.6	784.9
Drive method			Direct drive or V-belts drive		
V-pulley			4 belts, C-type groove	6 belts, C-type groove	8 belts, C-type groove
			P.C.D. 380		
Capacity control	Range	%	100, 50, 0	100, 66, 33	100, 75, 50, 25
	Method	-	Hydraulic pressure-controlled solenoid valve		
	Power source	V	100V, 110V/200V, 220V		
Safety Valve			Internal type/External type		
Lubricating oil	Selection	-	Viscosity: ISO-VG 46 or more For details, refer to Section 4.1.1 in this manual.		
	Oil pressure	MPa	Suction pressure + 0.20 to 0.25 (0.4 Max.)		
	Filling amount	L	24	24	25
Stop valve bore	Suction	-	80A	100A	100A
	Discharge	-	65A	80A	100A
Product mass		kg	560	710	780

- Unless otherwise specified, the pressure unit "MPa" represents the gauge pressure in this manual.
- Consider the amount of lubricating oil as a mere reference for a single compressor (not including oil cooler, oil piping, etc.)
- The product mass includes that of head cover and water-cooled oil cooler, but not that of V-pulleys.

2.3.2 Service Limits and Service Range

■ Service limits

Table 2-2 Service Limits for the Compressor

Item		Unit	Limit value	Remarks
Maximum discharge pressure		MPa	1.96	Varies with the set pressure of the safety valve used.
Maximum suction pressure		MPa	0.59	
Minimum suction pressure		MPa	-0.073	(= -550 mmHg)
Maximum differential pressure at high/low pressure		MPa	1.47	
Maximum oil supply pressure		MPa	Ps + 0.4	Ps = Suction pressure
Minimum oil supply pressure		MPa	Ps + 0.15	Ps = Suction pressure
Maximum discharge gas temperature		°C	120 (Freon) 140 (NH_3)	
Maximum supply oil temperature		°C	50	Temperature at oil cooler outlet port
Minimum supply oil temperature		°C	30	
Maximum speed	Direct drive	min^{-1}	1500 (Freon) 1750 (NH_3)	
	Belt-drive	min^{-1}	1500	
Minimum speed		min^{-1}	970	
Maximum belt drive power		kW	112	
Maximum cooling water outlet temperature		°C	50	Head jacket and oil cooler outlet temperature
Maximum cooling water pressure		MPa	0.5	
Degree of superheat: SH		°C	20 or less	Liquid flow-back is not allowed.

- Unless otherwise specified, the pressure unit "MPa" represents the gauge pressure in this manual.
- Refer to Section 4.3.1 "Start/Stop Limits" in this manual for the limitations (start and stop limits) to be applied when the running compressor is stopped and restarted.

2.3.3 Outer Dimensions

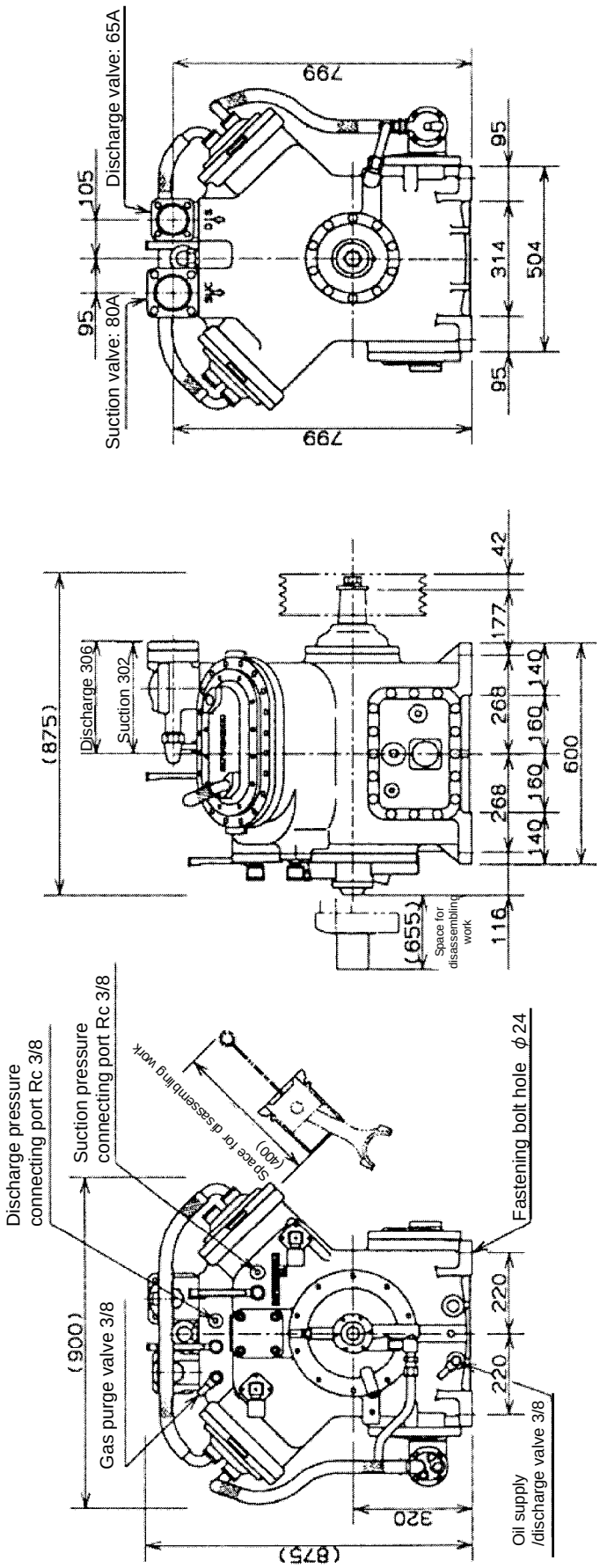

Figure 2–1 Outer Dimensions (4L)

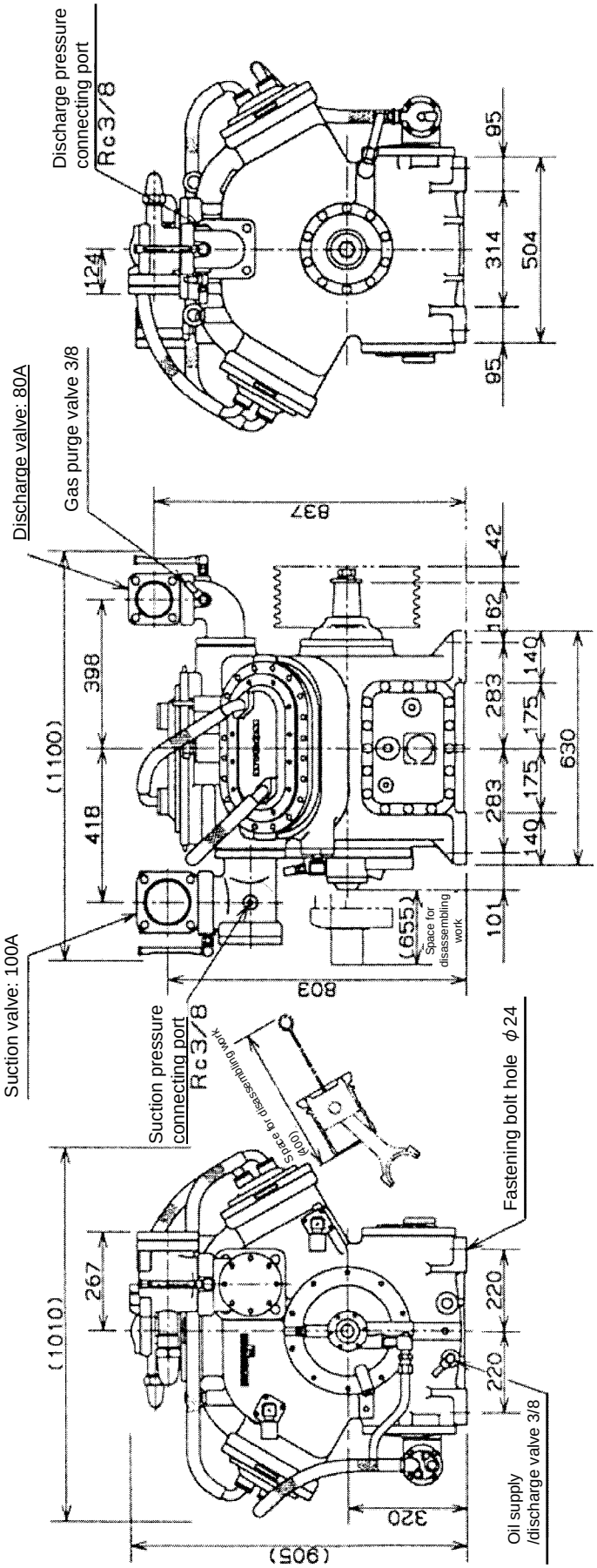

Figure 2–2 Outer Dimensions (6L)

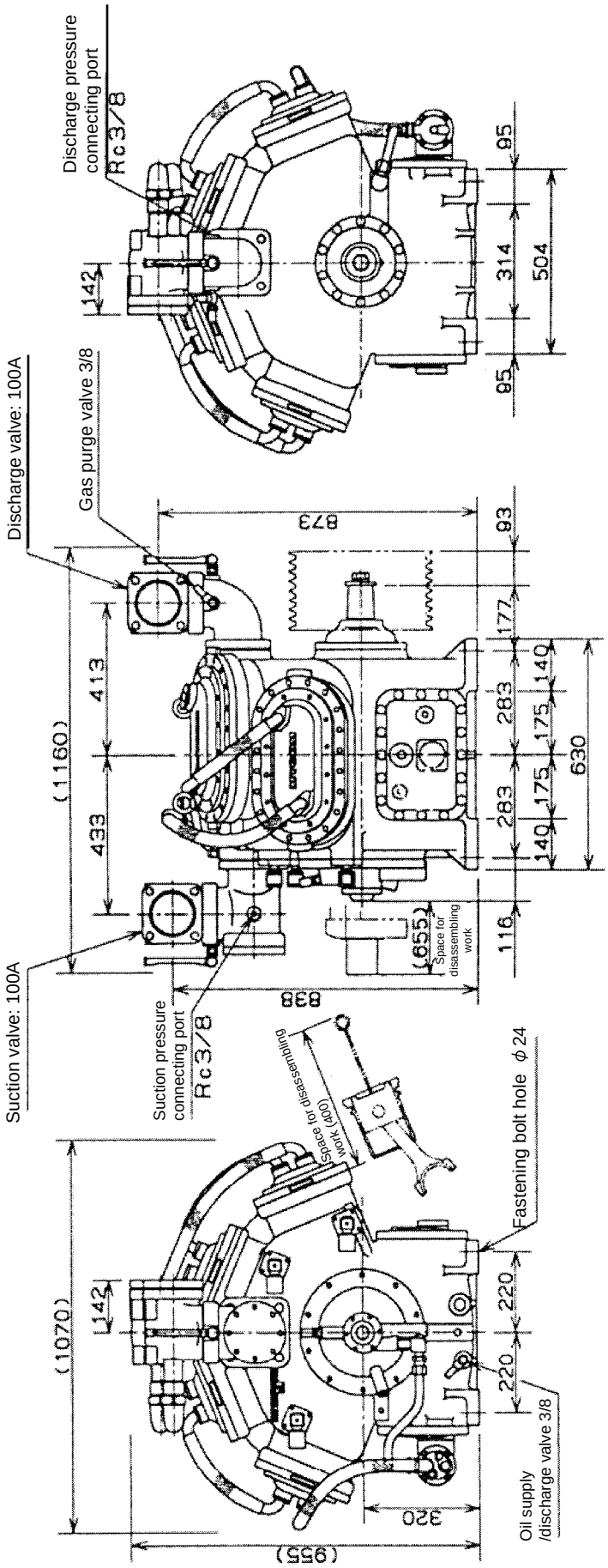

Figure 2–3 Outer Dimensions (8L)

2.4 Mechanism and Structure of Compressor

2.4.1 Sectional View of the Compressor

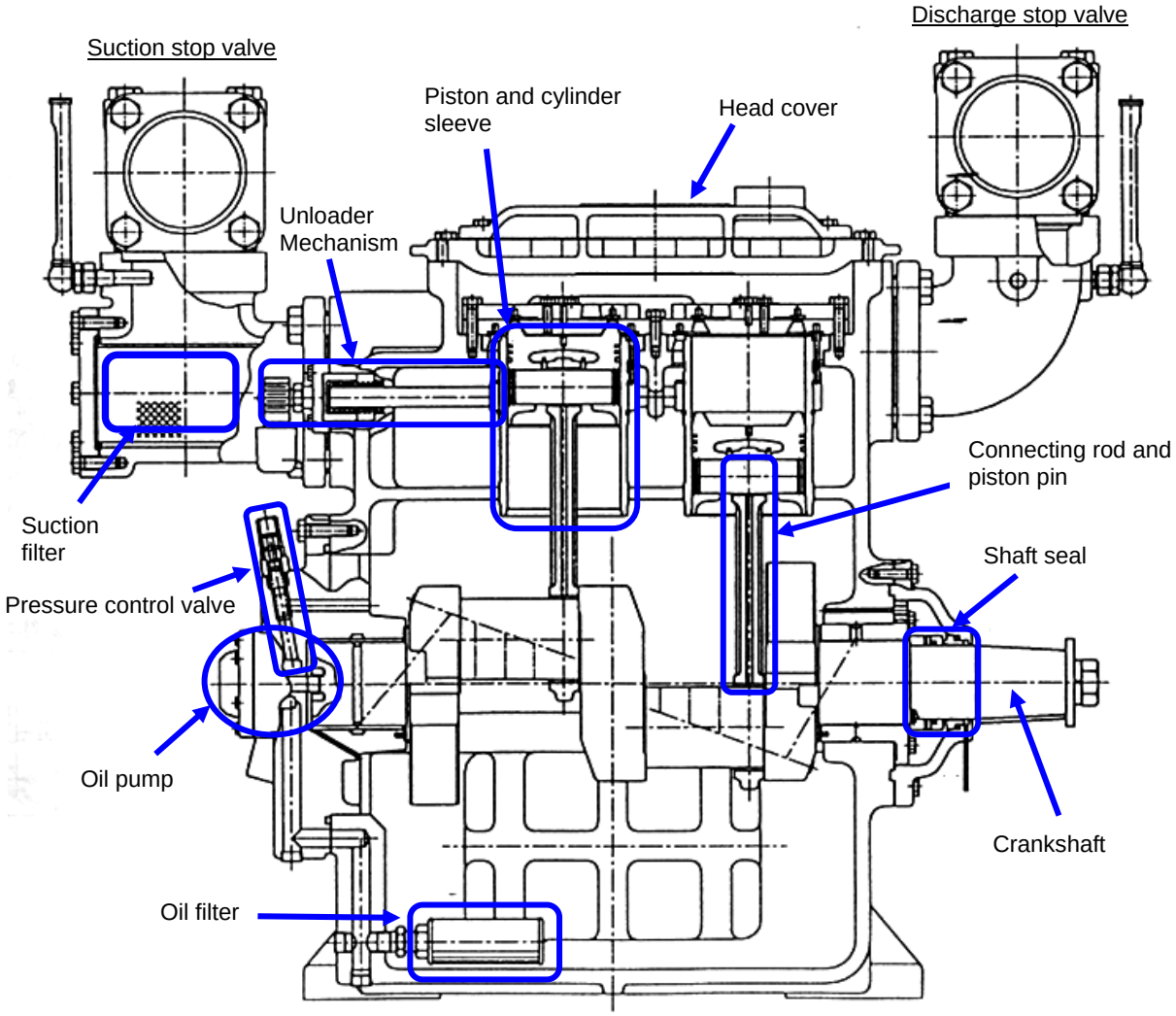

Figure 2-4 Sectional View of the Compressor (ex.: 8L)

2.4.2 Gas Compression Mechanism

The inside structure of the compressor is such that the gas discharge compartment is separated from the gas suction compartment in an integrated construction casted crank case.
The crankshaft, i.e., the drive shaft, which is supported by bearings at both ends, forms a crank to convert the rotating motion to the reciprocating motion. By linking the connecting rod to the crank (crank-pin), the piston is moved up and down to suck and compress the refrigerant gas. The crank has oppositely placed two crank pins (separated by 180 degrees in phase), and each pin is assembled with the connecting rods, the number of which is half the number of cylinders.
One rotation of the crank shaft makes one up/down cycle of the piston to complete the suction and discharge strokes.

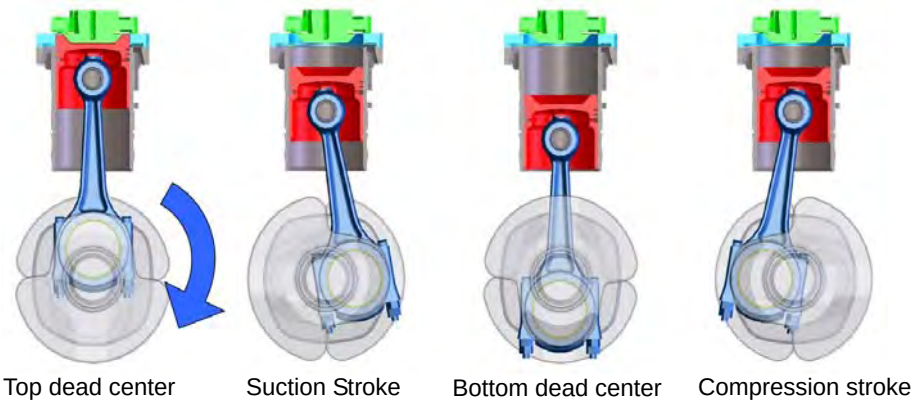

Figure 2-5 Movement of the Crank Shaft and Piston

The L-series has three types of cylinder layout: 4L is 2 cylinders × 2 lines layout (crank angle interval of 90 degrees); 6L is ~~3~~2 cylinders × ~~2~~3 lines layout (crank angle interval of 60 degrees); and 8L is ~~4~~2 cylinders × ~~2~~4 lines layout (crank angle interval of 22.5 degrees).
Mechanical seals are used for sealing the crank shaft.

2.4.2.1 Suction Stroke

a) When the piston goes down, the discharge plate valve is pressed onto the seat surface of the cylinder lip by the gas pressure after the discharge and the discharge spring force.

b) While the piston continues to go down, a pressure difference is generated between the suction gas chamber and the cylinder, of which gas pressure pushes up the suction plate valve from the path through the cylinder lip. As a result, the refrigerant gas vaporized in the evaporator flows into the cylinder.

c) When the piston reaches the bottom dead center, the gas chamber pressure becomes approximately equal to the cylinder internal pressure, and the suction plate valve is pushed onto the seat surface by the suction spring force. This completes the suction stroke and it move to the compression stroke.

2.4.2.2 Compression Stroke

a) As the crank shaft rotation continues, the piston starts to go up. When the gas pressure inside the cylinder starts to increase, the cylinder internal pressure is applied to the back of the suction plate valve and the valve is further pressed closely onto the seat surface.

b) As the piston further goes up, the gas pressure inside the cylinder is further increased. When the pressure exceeds the pressure of the condenser, it pushes up the discharge plate valve to discharge the gas from the cylinder to complete the compression stroke at the top dead center. By repeating the above cycle, continuous compression will be made.

2.4.2.3 Suction and Discharge Valves

The L-series compressors have a valve plate for each cylinder.

In the standard specifications, the discharge valve assembly is fixed by the bolts to eliminate the head spring.

Moreover, a ring valve is used to minimize the top clearance according to the shape of discharge valve seat and piston top to form a gas damper that can absorb the impact on the back. This design is based on the experiences with other models which employ the cone-shaped spring to generate different spring forces.

2.4.3 Unloader Mechanism

2.4.3.1 Mechanism

The unloader (capacity control) mechanism is implemented in order to reduce the start-up load of the compressor and to deal with the variation in the refrigeration load during operation. The unloader mechanism is operated by hydraulic pressure. By keeping some suction valves open at all times, it disables the compression process of the selected cylinders. As such, by changing the number of disabled cylinders, it can change the capacity of the entire compressor.

While the inlet gas is sucked into the cylinder through a path provided in the flange of the sleeve, this path is opened or closed by the suction plate valve.

The loaded state is shown to the left side of the figure 2-6. When the oil pressure applies to the unloader piston, the spring (coil-shaped) is pushed and compressed to move the unloader push rod to the right. The unloader push rod has two square bosses (to work on two cylinders), and they push the respective cam rings to move them for approximately 15 degrees.

Each cam ring has a slope cut. When one end of the lift pin is in this slope cut, the other end of the lift pin will not make contact with the suction plate valve, making the plate valve freely movable in the up/down direction. This is the state when the cylinder is loaded for operation.

The unloaded state is shown to the right side of the figure 2-6. When the back of the unloader piston is no more pressed by the oil pressure, the unloader push rod moves to the left.

As a result, the lift pin will be placed on the flat part of the cam ring, out of the cut in the cam ring. This positions the lift pin higher than when it is in the loaded state, and the plate valve is constantly pushed up (to keep the valve open).

As the plate valve is always open, the gas introduced into the cylinder chamber will not be compressed when the piston goes up and will escape into the suction chamber without changing the gas pressure.

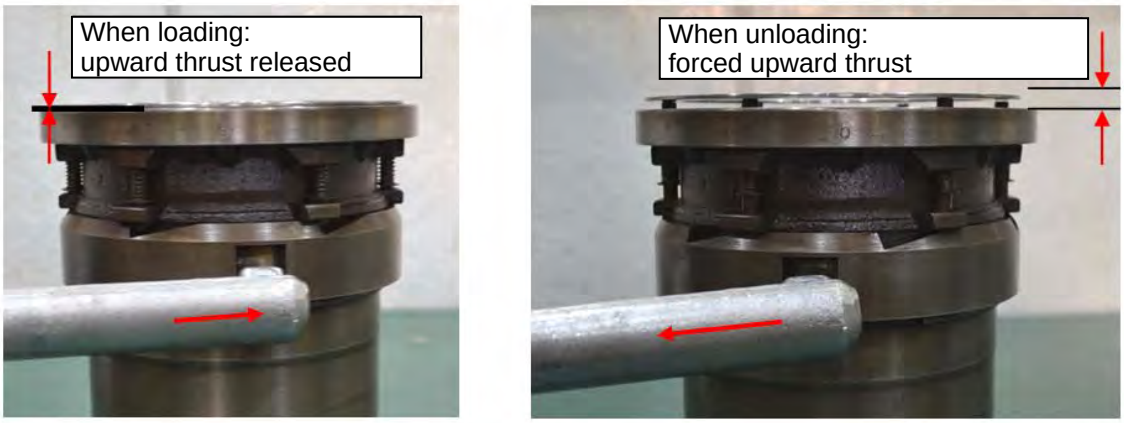

Figure 2-6 Unloader Mechanism

2.4.3.2 Layout and Operation Sequence of the Unloader

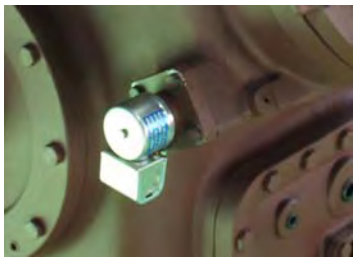

Unloader solenoid valve

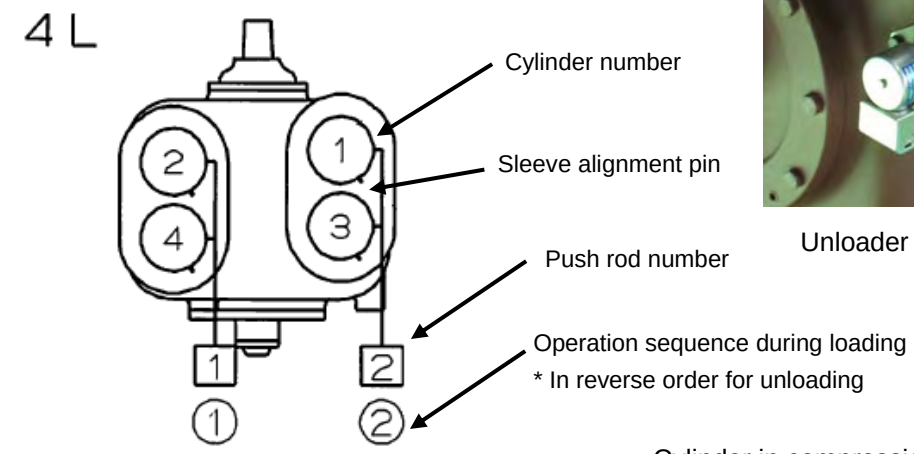

Cylinder in compression when loading

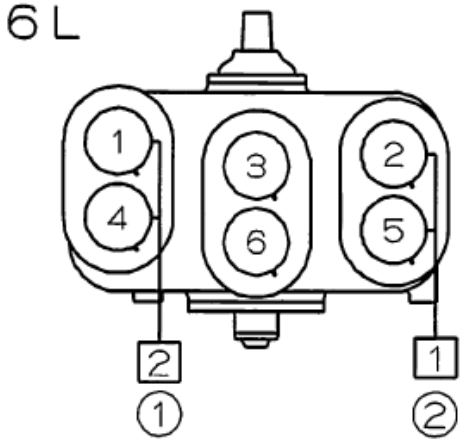

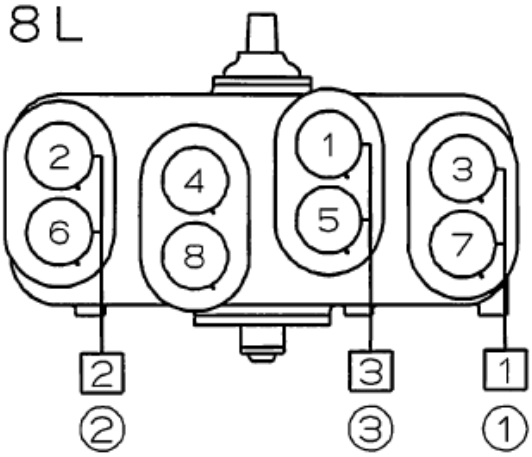

4L

0%	50%	100%
Standstill or in operation	②④	②④
	-	①③

6L

0%	33%	66%	100%
Standstill	③⑥	③⑥	③⑥
	-	①④	①④
	-	-	②⑤

8L

0%	25%	50%	75%	100%
Standstill	④⑧	④⑧	④⑧	④⑧
	-	③⑦	③⑦	③⑦
	-	-	②⑥	②⑥
	-	-	-	①⑤

Figure 2-7 Unloader Layouts

Note: The unloader is in loading when the solenoid valve is ON (open), and in unloading when the solenoid valve is OFF (closed).

2.4.4 Oil Supply Mechanism

On the L-series models with the standard specifications, both the oil cooler piping and the control pressure connecting piping are employed. On the suction side, one fine mesh oil filter is equipped. As a sufficient passage area is ensured, no problem will arise with units at a typical purity level.

The oil pump has the trochoidal gears with the reversible mechanism, thus the oil delivery direction is fixed regardless of crankshaft rotational directions.

The oil pressure control valve has such a structure that the entire valve is depressed on the seat by the spring. Thus, the valve regulates oil pressure is automatically in a certain range, and relieves abnormally high pressure with its safety mechanism.

2.4.4.1 Oil Supply Route

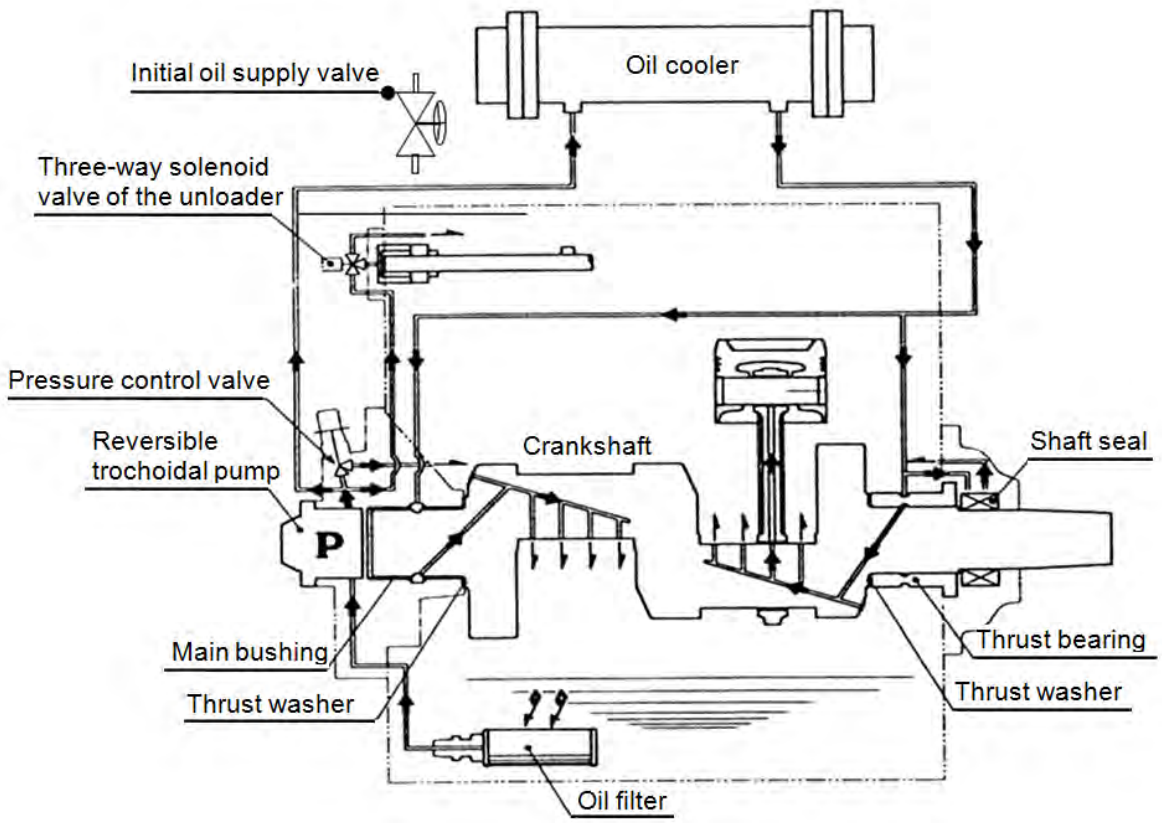

Figure 2-8 Oil Supply Route

A sufficient amount of lubricating oil will be retained in the oil receiver in the bottom of the crankcase, and the lubricating oil will pass through the strainer at the bottom to be sucked by the oil pump attached to the end of the crankshaft. The resulting pressurized lubricating oil will be supplied to the various parts. The pump is a reversible trochoidal pump that discharges the oil in the fixed direction regardless of the rotational direction of the crankshaft.

The lubricating oil discharged from the pump goes through the piping to the oil cooler, then enters the crankcase through its upper hand hold (on the seal side), flows through the bore on the crankcase, and then is split into two paths: one is used for lubricating the main bushing, the other is used for lubricating the thrust bearing and the shaft seal.

The lubricating oil fed to the main bushing goes through the oil groove on the crankshaft and enter its oil hole and further flows into the crank pin on the pump side.

The lubricating oil passing through the crankshaft lubricates the crank pin, flows through the hole via the connecting rod to lubricate and cool the inner wall surface of the cylinder near the piston pin.

The other flow of lubricating oil fed to the thrust bearing is further split into two paths to lubricate the thrust bearing and the shaft seal, respectively. The lubricating oil that has lubricated and cooled the shaft seal returns to the oil chamber of the crankcase. The lubricating oil fed to the thrust bearing passes through the oil groove and enters the oil hole on the crankshaft to the crank pins on the seal side, thus lubricating the crank pins and the cylinder inner wall, as well as on the pump side.

The lubricating oil that has reached the groove on the bearing housing then passes through a hole on the crankcase and is supplied to each solenoid valve on the unloader cover.

When the solenoid valve is turned on, the lubricating oil enters the unloader cylinder and pushes the piston to let it in the loaded status. Once the valve enters in the loaded status, the lubricating oil will not flow further and keeps it in position with the hydraulic pressure only. When the solenoid valve is turned off, the supply of lubricating oil is stopped and the hydraulic pressure so far applied to the unloader piston becomes equal to that in the crankcase, thus the lubricating oil in the cylinder is pushed out by the spring force, resulting in the unloaded status.

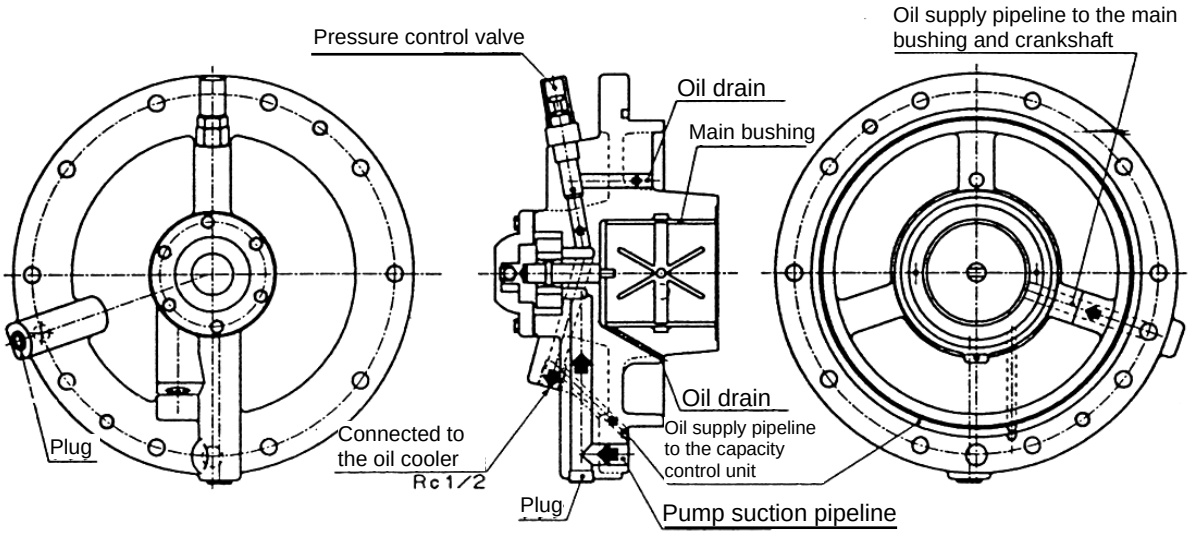

Figure 2-9 Oil Supply Route in the Bearing Housing

2.4.4.2 Lubricating Oil Amount

The amount of lubricating oil is checked at the oil sight glass. The standard is when the oil level is at the center of the sight glass. You must supply oil when the oil level becomes too low to be observed.

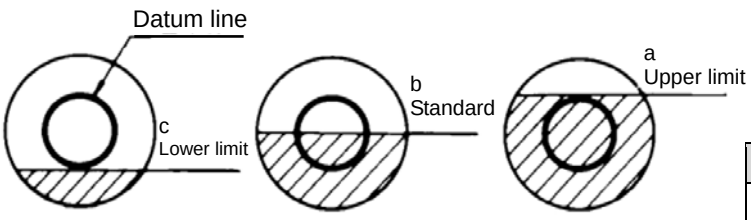

Figure 2-10 Control Standard for the Amount of Lubricating Oil

Table 2-3 Initial Amount of Lubricating Oil to be Supplied (liters)

	4L	6L	8L
Upper limit	28	28	28
Standard	25	25	25
Lower limit	22	22	22

2.4.5 Oil Cooler

The standard L-series models employ the water-cooled oil cooler of a shell and tubular structure.

Though an oil cooler of another cooling system can be installed, it is essential to adapt the one having the specified heat-exchange capacity.

For further information on the proper heat capacity, contact our sales offices or service centers.

2.4.6 Shaft Seal

Mechanical seals are used for the shaft seals for simple structure and high reliability.

The sliding surface of the seal is a compound of a special cast iron and carbon, and an O-ring is used for sealing.

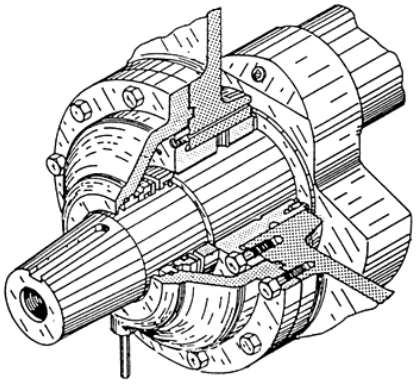

Figure 2-11 Oblique Sectional View of the Shaft Seal

2.4.7 Safety Valve

In the case of an internal built-in type safety valve specification compressor, the safety valve shown in Figure 2-12 is installed to contact from inside wall of the discharge side passage to the suction chamber. Internal built-in type safety valve is activated when the pressure difference between high pressure and suction pressure reaches 1.77 MPa or more.

In the case of ammonia refrigerant specifications, according to region, there is each specification of the external safety valve or internal built-in type safety valve.

In the case of external safety valve specifications compressor, installing portion for an internal built-in type safety valve has been stopped by a plug.

CAUTION
● **External safety valve specifications compressor has not been installed with the safety valve at compressor shipment. In this case, at the time of building your compressor package unit, be sure to install a safety valve between the compressor and the discharge stop (service) valve.**

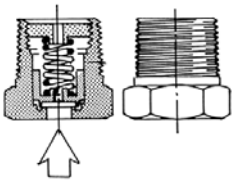

Figure 2-12 Internal Built-in type Safety Valve

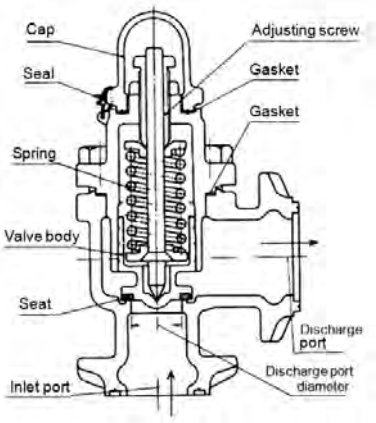

Figure 2-13 External Installing type Safety Valve

2.4.8 Shape of the Shaft End

The end of the compressor crankshaft is tapered and has a key groove on it.

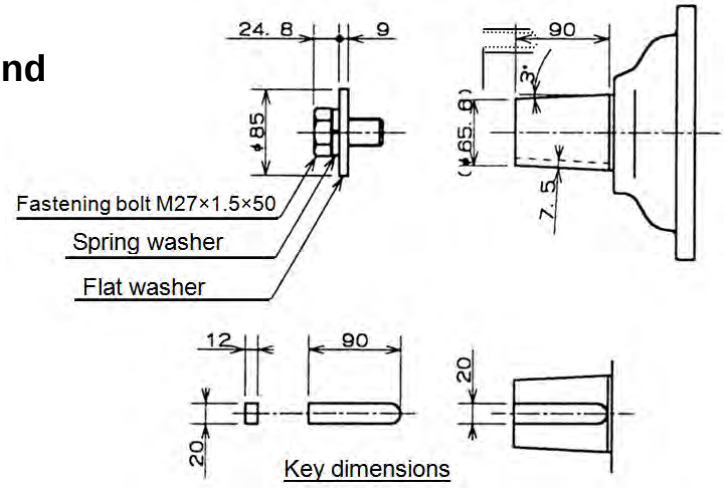

Figure 2-14 Dimensions of the Shaft End

2.4.9 Connection with the Drive Unit

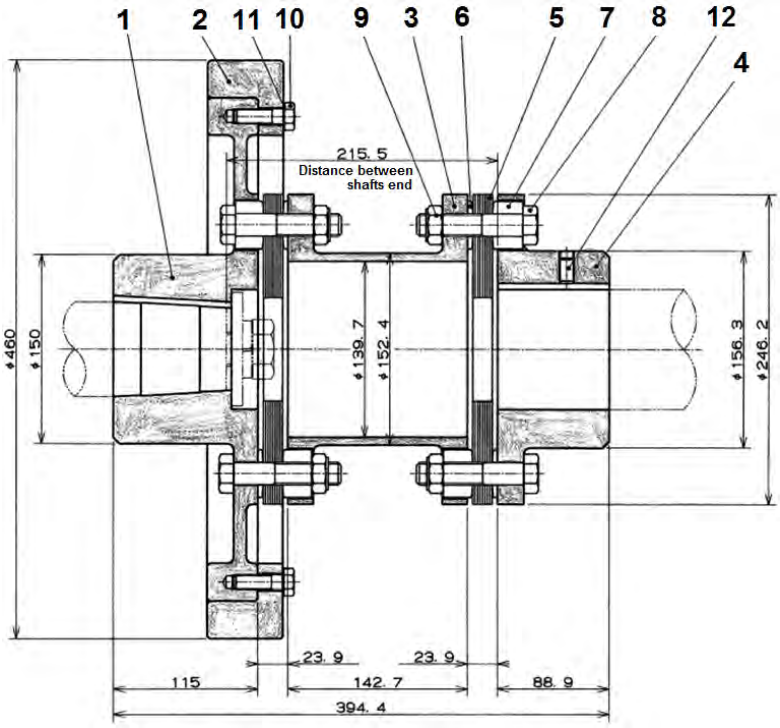

	Part name	Qty	Remarks
12	Key set screw (hex. socket)	1	M12 x L207
11	Spring washer	6	M12
10	Sub ring fixing bolt	6	M12 x L40
9	Fastening nut	8	M18 x 1.5 U-cut
8	Fastening bolt	8	M18 x 1.5
7	Overload washer	8	
6	Overload washer	8	
5	Element	2 set	27 sheets/set
4	Hub	1	
3	Spacer	1	
2	Sub ring	1	
1	Flywheel	1	

Figure 2-15 Sectional View of the Direct Coupling

With the direct driven L-series models, the form flex, double flexible coupling AB50-HN is commonly used as a standard, and a flywheel is used on the compressor side.

With the belt-driven models, the grooved V-pulleys (conforming to JIS C specifications), and the V-belt treads (type C) are employed as a standard.
The number of belts used is 4 for the 4L model, 6 for 6L, and 8 for 8L, respectively.
For the details of the standard slack and tension load, refer to Section 3.2.6 in this manual.

Table 2-4 Dimensions of the V-pulley (mm)

Item	4L	6L	8L
Width	110.5	161.5	212.5
Pitch diameter	380		
Outer diameter	394		

Chapter 3 Installation

3.1 Safety Precautions during Installation

【NOTE】

- The description in this Chapter 3 "Installation" assumes that the compressor is to be installed in a generic and commonly used refrigeration, cold storage, or air conditioning system.
  If the installation procedures described in this chapter are not directly applicable to the customer's specific refrigeration, cold storage, or air conditioning system, the customer is requested to prepare a separate work procedure document by paying sufficient attention to the safety issues and by referring to the relevant descriptions in this chapter, before actually performing the installation work. For any unclear issues, please contact our local sales offices or service centers.

- It may be required that the compressor installation work be done by a qualified technician.
  The work must be performed by technicians who have been qualified for the work according to the applicable laws, regulations, and other regulatory requirements in the country the compressor has been delivered to.
- Carefully read and sufficiently understand the content of this chapter and other related materials before actually performing the installation work.
- Any electrical work must be performed by a qualified electrical technician.
- Never get into or put any part of your body into an area immediately below the compressor being lifted up.

3.2 Installation Work

3.2.1 Unpacking

Check that the compressor is free from any damage or abnormality.

【NOTE】

- If there is any abnormality or missing part with the compressor, please contact our local sales offices or service centers.
- All packing materials that are no more needed after unpacking must be disposed of in a carefully controlled manner in accordance with the applicable laws, regulations, and any voluntary regulations of the customer

3.2.2 Storage

If the compressor is to be stored before the installation:

- Keep it indoors, and
- Fill the compressor with Nitrogen gas and seal it (at the gauge pressure of approximately 0.15 MPa).

【NOTE】

- Upon packing, the compressor is filled with Nitrogen gas to prevent rust.

3.2.3 Transportation

DANGER

- **Should the compressor being lifted drop, there is a high risk of death or severe injury. Provide sufficient protection such that no one can enter an area below a compressor being lifted up.**

For the mass of the compressor, refer to Table 2-1 "Standard Specifications of the L-series Compressors" in this manual Section 2.3.1. For the outer dimensions, refer to Section 2.3.3 "Outer Dimensions" in this manual Chapter 2.

1. When lifting the compressor, be sure to prepare and use lifting devices and other proper tools capable of lifting the compressor mass within the specified safety load limit.
2. A sufficient space must be provided to ensure that the lifting work can be safely conducted.
3. Make sure to check the wire ropes before use. Carefully check the wire ropes for any kink, knot, or broken strand. Never perform the lifting work before it has been confirmed that the wire ropes have no problems. If any doubt remains, ask a qualified specialist to check the condition.
4. If only the compressor body is to be lifted, use the eye bolts ~~of~~ on the compressor to hook the wire ropes.
5. If the base structure with motor and the compressor to be lifted, use the eye bolts on the compressor and the base structure to hook the wire ropes. Never use the eye bolts on the motor.
6. Check that the transportation path is free from any obstacles that can hinder smooth transport, according to the size of the compressor.
7. Before lifting the compressor (unit), check that the hook is positioned above the center of gravity of the compressor (unit).
8. Before starting to lift up the compressor (unit), instruct all the workers to be sufficiently away from the lifting area.
9. Just before starting to lift up, provide the coworkers with a sign (such as a call, hand signal, etc.) of starting the lifting action. Do not start to lift up unless the sign (such as a call, hand signal, etc.) has been fully acknowledged.
10. Wind up the wire ropes slowly until shortly before the compressor (unit) leaves from the ground.
11. Wind up the wire ropes again until the compressor (unit) leaves the ground, and check that the compressor (unit) is not tilted. If it is tilted, return the compressor (unit) to the ground and correct the tilt. After that, restart the lifting operation.
12. Slowly lift up the compressor (unit). A sudden lifting may cause damage to the wire ropes and/or other hoisting tools or some part of the compressor (unit).
13. After the hoisting has started, check the condition to see that the wire ropes and other hoisting tools are in normal condition. Check that the compressor (unit) is not tilted.
14. When moving the compressor in the lifted condition, be sure to use guiding ropes.
15. Evacuate people from the forward path and check the safety in the direction of the movement.
16. Unless it is inevitable, do not bring the compressor (unit) above any safety passage.
17. Do not place the compressor (unit) on a safety passage. The safety passages shall always be kept unblocked.
18. Before lifting down the compressor (unit), clear the area from any obstacles. Make sure the compressor (unit) will not be tilted or become unstable.
19. When lowering the compressor (unit), also notify the coworkers around the working area.
20. Be sure to carefully and gradually lower the compressor (unit) so that it is not damaged by impact on the ground.
21. If the compressor body is to be placed on two or more blocks, properly adjust the height of each block for the compressor to be stably leveled on the blocks.

3.2.4 Preparation for Installation

■ Installation space

Prepare an installation space where the operation, cleaning, maintenance, and inspection work can be easily performed by referring to the relevant figures in Chapter 2, Section 2.3.3 "Outer Dimensions" of this manual.

Because the crankshaft must be taken out from the main body during an overhaul work, a sufficient space must be provided on the bearing head side, for a length corresponding to the full width of the crankshaft, as measured from the crankcase end. Also on the opposite main bearing side, a space of more than 60% of the full crankshaft length shall be provided.

In addition, along the direction of taking out the cylinders, a clearance of at least 500 mm shall be provided to avoid interference with other components such as pipes.

■ Lighting

Provide sufficient lighting to allow easy operation, cleaning, maintenance, and inspection work.

■ Ventilation

If natural ventilation is not sufficient, install proper ventilation fans according to the laws and regulations.

■ Cooling water

Ensure that a sufficient amount of cooling water is provided as required by the customer's system.

■ Piping

Refer to the relevant figures in Chapter 2, Section 2.2.3 "Outer Dimensions" of this manual.

3.2.5 Installation

3.2.5.1 Placement

Make sure that the compressor mounting surface of the target refrigeration, cold storage, or air conditioning system is sufficiently flat and level. If it is not sufficiently leveled, tightly fastening the compressor mounting bolts can cause deformation of the compressor and could hinder normal operation.

3.2.5.2 Oil Separator

The gas discharged from the compressor contains oil mist together with the refrigerant gas. To separate the oil from the refrigerant gas, install an oil separator. Use a float valve for the return oil and do not return oil from the receiver.

3.2.5.3 Protection Device

To protect the compressor and prevent accidents, be sure to install the devices described in Section 1.4.5 "Automatic Control and Protection Systems for the Compressor" in Chapter 1 of this manual.

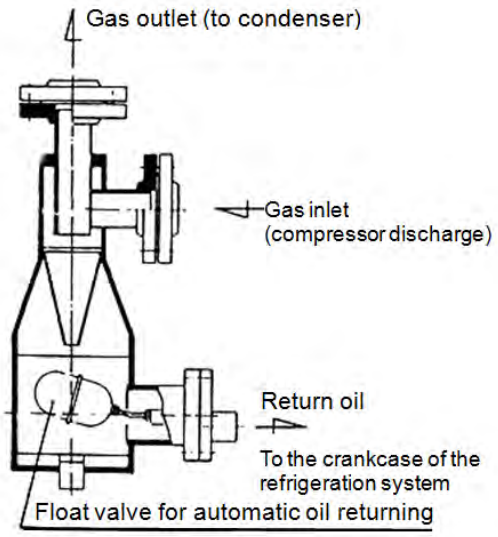

Figure 3-1 Oil Separator (example)

3.2.5.4 Piping

The vibration of the compressor will be transmitted to the building via the base structure and the pipelines. Be careful about the installation of piping supports to prevent possible resonance of the building.

■ Refrigerant piping

Be careful about the following points in connecting the refrigerant pipe line:

- The compressor is one of a few components that have movable parts in the target system. Such movable parts are vulnerable to dust, dirt, and other foreign matters. Be careful during the plumbing work not to put scales and other foreign matters inside the compressor.
- Some compressors (mainly the ones to be shipped overseas) are filled with Nitrogen gas to prevent rust. Therefore, do not open the cover flanges or the suction/discharge stop valves until it is needed to do so.
- There must be no moisture in the piping system. Any moisture inside can cause troubles after the operation has started. Be sure to connect pipes in dry condition.
- Improper work on the suction gas piping can cause problems such as no oil return to the compressor and liquid hammering.
- When connecting a pipe to the compressor, be sure to use the same pipe size as that of the compressor. If the size of the connecting pipe is smaller than that of the compressor, the flow of the oil or refrigerant is impeded and can cause problems.
- Every connecting pipe must have a support for not to apply excess stress to the compressor. Also, if vibration isolators are used for the base, the piping system must use suitable flexible tubes.
- If generation of dew is expected for the pipe, it must be isolated.

■ Cooling water pipe

When using a water-cooled oil cooler and water-cooled head cover, first connect the oil cooler and then head jacket to the cooling water system.

In the case of automatic operation, use a solenoid valve to prevent water flow when the motor is stopped. If water flow is maintained while the motor is not operating, the refrigerant in the refrigerator can condense, and as a result, it can cause increased oil consumption, valve damage, and/or seizure of cylinders.

CAUTION
● **No branching is allowed in the cooling water system from the oil cooler to the head jacket. Otherwise, the resulting pressure loss (resistance) difference can stop the flow of cooling water at some points, and it is very dangerous.**

3.2.6 Shaft Alignment between the Compressor and Driving Machine (V-belt)

CAUTION

- **If any V-belt is to be replaced by a new one, replace all the V-belts together as a set, by procuring a set of V-belts. Also, if new and old belts are mixed together, it can cause abnormal vibration due to the different levels of wear.**
- **Even if the nominal dimension is the same, the length may vary to some extent. In such a case, the force may be applied only on the shortest one, and it can damage the belt or cause abnormal vibration.**
- **The V-belts must be kept free from oil or grease. Wipe out any oil or grease if attached.**

【NOTE】

- Although the V-belts are tensioned to the specified initial tension at factory shipment of the belt unit, initial elongation before they are actually used for operation may result in the tension less than the minimum tension load. Be sure to check the tension load after the installation, and adjust it to the correct tension load for a new belt before starting the operation.

3.2.6.1 Alignment Method and Criteria

Check that the centerline of the compressor shaft and that of the motor shaft are exactly parallel with each other by using a stretched string from the side of the flywheel to the side of the motor pulley.
If they are misaligned, the high speed rotation accelerates the wear of belts, applies excessive stress on the bearings, and shortens the service life of the compressor and the motor.

Alignment criteria: L = 1mm max.

Figure 3-2 Alignment Criteria

3.2.6.2 Belt Tensioning

Loosen the slide base of the motor to get the pulleys of the compressor and motor closer, and place the V-belts into their slots in the loosened state. After checking that the V-belts are correctly placed into the V-grooves, apply tension to the belts by pulling the motor by fastening the bolt.

Deflection = 0.016 × span length (mm) (span length ≒ wheelbase)

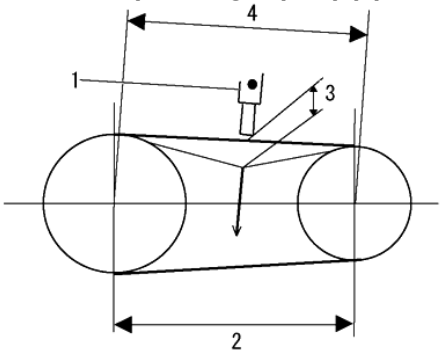

1: Tension meter
2: Wheelbase
3: Deflection
4: Span length

Figure 3-3 Deflection

Table 3-1 Quick Reference for the Deflection (mm)

V-belt type	Wheelbase					
	1000	1100	1200	1300	1400	1500
C type Red belt	16.0	17.6	19.2	20.8	22.4	24.0

Table 3-2 Quick Reference for Tension Load (N per belt)

V-belt type	New belt	Re-tensioning	Minimum tension load
C type Red belt	75 to 65	65 to 55	45

Note 1: The first re-tensioning shall be made 2 to 3 hours after the operation has started.

Note 2: To check the tensioning of the V- belts, rotate the V-pulley to check the tension load.

Note 3: When the minimum tension load is used, as it varies with the load condition, make sure that the belts do not act violently during operation.

【NOTE】

- When new belts are used for two to three hours for the first time, the initial elongation, initial friction, and removal of flywheel paint will significantly reduce the tension load of them, to result in a load less than the minimum tension load. If the use of the V-belts is continued in this condition, not only the slippage of V-belts can reduce the service life of the belts but also can the belts act violently, turn over due to one-sided wear, disengage, or cause other problems. Be sure to re-tension the belts after the commission.
- Insufficient tension will reduce the service life of the belts. If the belts are replaced by new ones, check the tension again after they have been used for 24 to 48 hours.

3.2.7 Shaft Alignment between the Compressor and Driving Machine (Direct Drive)

For assembling the direct coupling, refer to Chapter 2, Section 2.4.9 in this manual.
In the case of a direct drive, adjust the shaft alignment between the compressor and the driving machine to within the allowable limit given in the table to the right.

Table 3-3 Allowable Misalignment

	Allowable limit
Offset	6/100 mm
Angularity	3/100 mm (referenced to 100 mm diameter)

In the case of standard coupling AB50-HN, the face-to-face distance of the hub should be 190.5 ± 0.25 mm and tightening torque of the coupling set bolts should be 220 N·m. Be careful not to fasten the bolts excessively, which may bent the coupling element, causing an abnormal noise during the operation.

The fastening nut comes with a nylon lock bushing to prevent loosening. Since the loosening prevention will diminishes through repeated detaching and attaching of the coupling, avoid detaching and attaching the locking nut over 10 times. For further detaching and attaching, replace the locking nut for a new one.
The coupling comes with a chamfered thick washer and a thin washer. Mount the washer so that its chamfered side faces the coupling element.

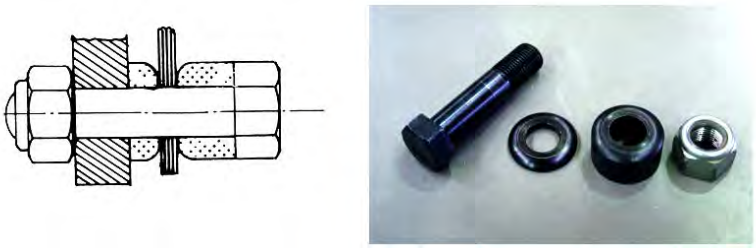

Figure 3-4 Coupling Set Bolt

The Figures 3-5 and 3-6 are the images of measurement of the offset and angularity using the dedicated hub, dial gauge and magnet stand. For further details of the alignment work, please contact our local sales offices or service centers.

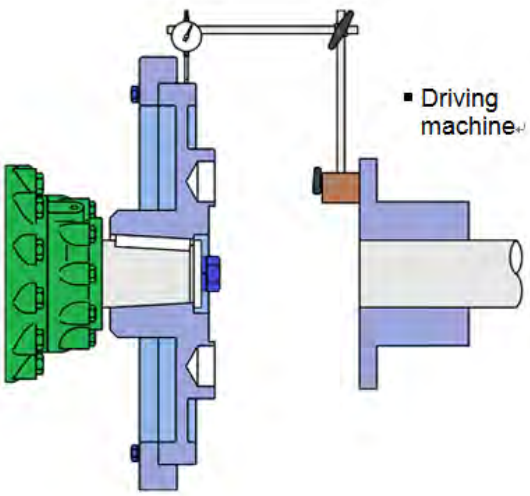

Figure 3-5 Measuring the Shaft Offset

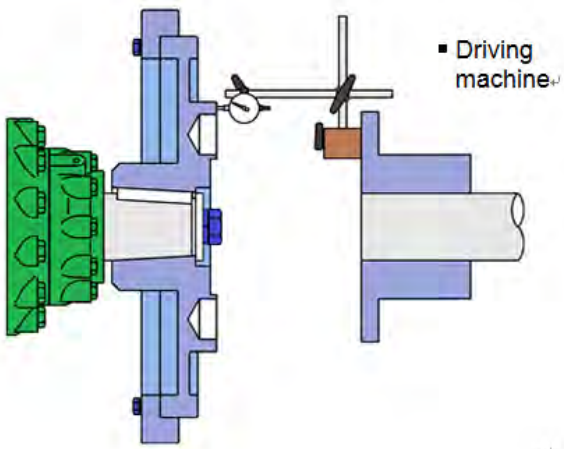

Figure 3-6 Measuring the Shaft Angularity

3.2.8 Initial Charge

3.2.8.1 Lubricating Oil

Perform initial charge of the lubricating oil by referring to Section 4.1.3 "Initial Charging Method".

Specify the initial charge amount of lubricating oil referring to Section 2.4.4.2 "Lubricating Oil Amount" in this manual Chapter 2 and depending on the equipment configuration and the operating conditions of your package unit.

3.2.8.2 Refrigerant

Depending on the use refrigerant and equipment configuration of your package unit, specify the work procedure that considered safety enough, and conduct the refrigerant filling work accordingly.

3.2.9 Checkout after Installation

The customer is requested to develop its own checklist and checkout procedures appropriate to the customer's own refrigeration, cold storage, or air conditioning system, by using the following summary descriptions on the inspection items to be checked after installation of the compressor as a reference material.

■ **Wiring for the automatic control**

- Wiring between the control panel and switches
- Motor startup method (automatic/semi-automatic) and direction of rotation
- Insulation resistance of the motor

■ **Operational test for protection devices**

Conduct the operational test of the protection device by referring to Section 1.4.5 "Automatic Control and Protection Systems for the Compressor."

■ **Airtightness test and refrigerant leak test**

The customer is requested to conduct the airtightness test and refrigerant leak test for the system.

DANGER

- **Never use oxygen or flammable gas for the airtightness test. Otherwise, there is a risk of explosion.**
- **Do not compress air using this product. Otherwise, there is a risk of explosion.**

CAUTION

- **If carbon dioxide is used for the air tightness test of a compressor that use ammonia as the refrigerant, it may result in the deposition of ammonium carbonate, and it can cause a failure.**

Chapter 4 Operation of Compressor and System

4.1 Lubricating Oil (Refrigerant Oil)

The lubricating oil is mainly used for lubricating the moving/sliding members of the compressor, preventing abnormal wear, and cooling each section. For this, the following properties are required for the oil:

- An appropriate viscosity is maintained within the operating temperature and pressure ranges.
- The liquidity is maintained even under extreme low temperature conditions (within the operating temperature range of the refrigerating system).
- It is chemically stable and will not corrode or change the quality of the components used (such as metals or rubbers).
- The wax component will not be separated even under low temperature conditions.
- Sludge and carbon are not easily generated even under high temperature conditions.
- Water is not contained.

4.1.1 Precautions for Selecting the Lubricating oil

- The type (brand) of the lubricating oil depends on the refrigerant to be used. For details, contact one of our sales offices or service centers.
- For NH_3 refrigerant, do not use polyol ester (POE) or Poly alpha olefin (PAO).
- Mineral oils as specified in ISO–VG 46-68 are recommended.
  As the minimum requirement, the required viscosity shall be ensured for the oils supplied to sliding members. If any lubricating oil that can absorb a significant amount of refrigerant (inter-soluble oil) is used, the viscosity under the operating conditions may significantly be reduced from that specified in the product specification. Select the lubricating oil that can maintain the viscosity of 20 to 70 mm^2/s under normal operating conditions.
- Take into account the circulation of the lubricating oil in the entire system. After lubricating and cooling the various sections of the compressor, the lubricating oil will mostly return to the oil receiver of the crank case. However, some part of the lubricating oil will be discharged together with the refrigerant. While the oil discharged from the compressor will mostly be captured by the oil separator and returned to the compressor, some part will be sent to the condenser and evaporator. As such, the lubricating oil is required to maintain a sufficient liquidity and stability in the various types of components with varying temperature range.

4.1.2 Changing the Brand of the Lubricating oil

- When the brand of the lubricating oil used is changed, mixing of the old and new oils can cause unexpected problems. Pay sufficient attention when you are to change the lubricating oil.
- If the manufacturers are different, contact both of them to check if there is no problem. Even if the manufacturer is the same, similar confirmation is required when the brand name of the lubricating oil is to be changed.
- There is no problem in changing the viscosity grade within the same brand. However, the viscosity grade after the change must be suitable to the operation.

4.1.3 Initial Charging Method

The initial charge and oil supply after an overhaul is made from the initial charge port, in order to fill the oil cooler, oil filter, and all the oil paths with the lubricating oil.

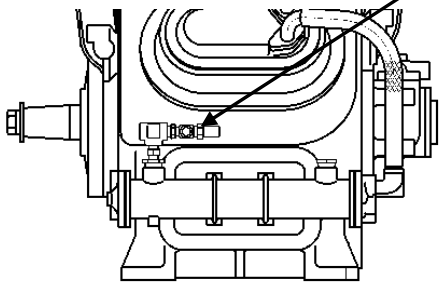

Figure 4-1 Initial Charge Port for the Lubricating oil

4.1.4 Replenishment of Lubricating oil

The oil level will gradually become lower as the operation is continued. Supply additional oil according to the following procedures while the oil level can still be checked at the oil sight glass. For the decision regarding the amount of oil, refer to Chapter 2, Section 2.4.4.2, Figure 2-10 "Control Standard for the Amount of Lubricating oil" in this manual.

CAUTION
● **When adding the lubricating oil, prevent air and moisture from entering the oil.** ● **The lubricating oil to be replenished must be clean, with no contamination.** ● **To prevent bubbling inside the crank case, be sure to slowly and gradually supply the oil.** ● **The lubricating oil must be stored under sealed conditions until it is used, for not to absorb moisture in the air.**

How to supply oil while in operation (example)

a) Attach the charge hose to the oil supply and discharge valve shown in Figure 4-2, and put the end of the hose into the can of new oil. Then, slightly open the valve to purge the air inside the hose using the gas pressure in the compressor.

b) Gradually close the suction stop valve of the compressor to the point the suction pressure is only slightly vacuum (approximately -0.026 MPa).

c) Gradually open the oil supply and discharge valve to gradually suck the oil.

d) After the required amount of oil has been supplied, securely close the oil supply and discharge valve.

e) Gradually open the suction stop valve to resume the steady operation.

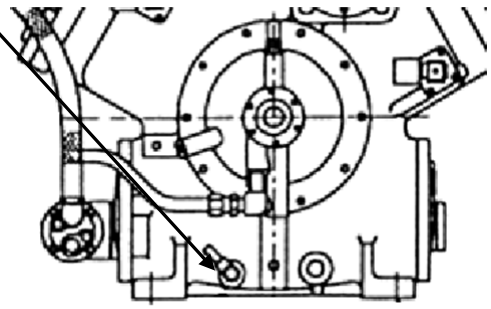

Fig. 4-2 Oil Supply and Discharge Valve

4.1.5 Oil Pressure Setting

Adjust the oil pressure 0.20 to 0.25 MPa (max.: 0.4 MPa) higher than the suction pressure using the oil pressure regulating valve. While these default values were adjusted before shipment, be sure to verify them by yourselves at your commissioning.

4.1.6 Management Criteria of the Lubricating Oil

Lubricating oils are classified into the following categories and different criteria are applied to each category.

■ Mineral oil (naphthenic oil) and synthetic oil (alkylbenzene [AB], polyalphaolefine [PAO])

■ Inter-soluble synthetic oils for NH_3 refrigerant: Polyalkylene Glycols (PAG)

- **Oil sampling and analysis is recommended every six months.**
- **If the following management criteria are not satisfied, replace the oil.**
  * Note that the water content of PAG shall be excluded from the above oil replacement criteria. Refer to the note *2 in the table below.

The analysis items and the criteria are shown in the following tables.

Note that these criteria may be changed without notice according to actual results.

Table 4-1 Synthetic Oil Compatible with NH_3 Refrigerant: Polyalkylene Glycols (PAG) *1

Item	Criteria
Color phase	ASTM color scale: 4.0 or less
Total acid value	0.1 mg·KOH/g or less
Kinetic viscosity	Within ±15% in variation when compared with fresh oil
Water content	2000 mass ppm or less ***2**
Degree of contamination	Degree of contamination measured by mass method (millipore value) shall be 25 mg/100 ml or less.

Table 4-2 Mineral Oil (Naphthenic Oil) and Synthetic Oil (Alkylbenzene [AB], Polyalphaolefine [PAO])

Item	Criteria
Color phase	ASTM color scale: 6.0 or less
Total acid value	0.3 mg·KOH/g or less
Kinetic viscosity	Within ±15% in variation when compared with fresh oil
Water content	100 mass ppm or less
Degree of contamination	Degree of contamination measured by mass method (Millipore value) shall be 25 mg/100 ml or less.

***1** When NH_3 refrigerant is used with PAG, the inside of the equipment can be easily rusted due to water absorption. Furthermore, as PAG has a higher cleaning effect than conventional mineral oils, the rust developed in the equipment can be easily carried to the compressor, to make the degree of contamination higher during the initial phase of operation. As such, it is recommended to replace the oil with new oil, after 2000 to 3000 hours of operation. To prevent possible absorption of water during oil charge, rainy days should be avoided. Complete charging within 15 minutes after the oil container is opened.

***2** This value is only for reference purposes, due to possible water absorption during the sampling, as the oil has high water absorption characteristic. Also, in the case of NH_3 refrigerant, NH_3 may be detected as water. If this limit is repeatedly exceeded in two or more samplings, it should be judged that it does not satisfy the management criteria.

4.1.7 Lubricating Oil Replacement Timing

4.1.7.1 After Starting the Initial Operation

As the oil can easily be contaminated and degraded relatively quickly during the initial operation due to scales and deposits remaining in piping and vessels, replace the oil after 100 hours of operation.

Furthermore after 500 hours, replace or to analyze the lubricating oil.

When analyzing, if it is found as a result of the analysis that the management criteria given in Table 4-1 or 4-2 are not satisfied, the oil must be replaced.

4.1.7.2 During Normal Operation

Lubricating oil degrades gradually as the system is operated over time.

The rate of degradation depends on the operating condition, type of oil and amount of foreign matters and moisture contained in the oil.

When inspecting and cleaning the oil filter, replace the lubricating oil, or analyze it at every six months.

We recommend oil analyze because that is as effective to understand the condition of the package unit.

When analyzing, if it is found as a result of the analysis that the management criteria given in Table 4-1 or 4-2 are not satisfied, the oil must be replaced.

If the oil filters are frequently clogged or the oil color quickly becomes darker and unclear, replace the oil after removing the cause of the problem.

In addition, replace the oil every time the compressor is overhauled.

4.2 Initial Operation

4.2.1 Precautions for Initial Operation

DANGER

- **Check the open/close status of each valve before operation. In particular, operating the compressor with the high pressure side valves closed carries a risk that it may cause a rupture. Also, if the valves that connect to various protection devices are closed, the protection devices will not operate properly.**
- **Be sure to fully open the source valve of safety valves at all times, except when the safety valves are to be inspected.**
- **Before operation, the belt (coupling) guard must be attached. Operating the compressor without installing the belt (coupling) guard carries a risk that the operator could be caught in rotating parts to result in severe personal injury or death.**
- **Ensure that sufficient safety measures are in place when operating valves or conducting inspection with the compressor running. While the compressor is running, there are all sorts of risks including death, severe injury, minor injury, electric shock, burn, and so on.**

The refrigerant system installed must be operated for a long time maintaining the initial functions. For this, the initial operation has an important significance.

Within 24 hours after starting the initial operation, dust, scale, rust, sand, and other foreign matters in the pipe system tend to be collected in the compressor being carried by the flow of refrigerant gas. Tiny foreign matters not captured by the suction strainer or scale trap will be mixed in the oil and can cause a failure or abnormal wear.

While sucking of foreign matters into the compressor lasts for a long time during operation, the amount of such matters is the largest during this initial period of operation.

Check the existence of foreign matters by inspecting the suction strainer and also by checking the contamination of the lubricating oil.

As the condition of the oil in the crank case should indicate the state of contamination in the refrigerant system, you can determine that the inside of the system is clean if the oil in the crank case is kept clean and clear for a long period of time. If the oil is dark or impure dark brown, some foreign matters in the system are contaminating the oil. In such a case, be sure to change the oil as soon as possible to prevent foreign matters from entering the sliding/moving parts of the compressor.

In particular, check for any abnormal overheating or abnormal noise in the compressor.

【NOTE】

- When cleaning the oil filter and suction filter, it is necessary to properly process the refrigerant and to open the compressor. For the processing of the refrigerant and compressor disassembly/assembly procedures, refer to Chapter 5, "Maintenance and Inspection" in this manual.

4.2.2 Initial Operation Method

CAUTION

- **If the compressor to be used has been in storage for a long time, i.e., more than one year after the delivery, be sure to open each head cover, hand hole cover, and seal cover to check the inside. At that time, supply sufficient oil to the opened parts and change the O-ring of mechanical seal.**

a) Before running the compressor, perform manual turn or inching (short run of 1 or 2 seconds) few times to check that the oil pressure gauge is operational. Also check at the sight grass that the oil level is slightly lowered at the same time.

b) Operate the compressor.

c) Perform the initial operation following Table 4-3 "Guidelines for Oil Replacement and Filters Inspection".

Table 4-3 Guidelines for Oil Replacement and Filters Inspection

Elapsed time	Replacement of oil and cleaning of oil filter	Cleaning of suction filter
After completion of refrigerant charging operation	○	△
After completion of commissioning	○	○
100 hours after starting operation	○	○
500 hours after starting operation	Oil analysis or replacement Cleaning the oil filter	○
NOTE: If contamination of the lubricating oil or clogging of the strainer is found, perform oil replacement or inspection/cleaning regardless of the above guideline.		

○･･･Mandatory △･･･Inspection and cleaning is recommended.

4.3 Operating Precautions

For the daily control items and their details, refer to Chapter 5, Section 5.1 in this manual.

Other important operating precautions are given in the following paragraphs.

4.3.1 Start/Stop Limit

For normal operation of the compressor, the start/stop limits, stop duration, and other requirements are specified as follows.

The start/stop times and stop duration are specified in order to prevent possible burning of electric circuits and components or overheating and seizure of the compressor cylinders.

Table 4-4 Specification for Start/Stop Times, Stop Duration, etc.

Item	Specified value	
	Water-cooled	Air-cooled
Number of start/stop cycles	4 times per hour or less	2 times per hour or less
Stop duration	15 minutes or more	30 minutes or more
Minimum operation time	15 minutes or more	
Number of unloader operations	5 times per hour or less	

4.3.2 Liquid Flow-Back Prevention

The "liquid flow-back" is a phenomenon when the refrigerant liquid reaches the compressor without being completely evaporated with the gas. The liquid flow-back phenomenon may cause insufficient lubrication of the compressor, generation of abnormal vibration and noise, and/or abnormal foaming of the lubricating oil (oil loss). To prevent liquid flow-back operation, properly adjust the expansion valve of each cooler.

4.4 Action to Take when the Compressor is Stopped for a Long Time

If the compressor is to be stopped for a long time, be sure to recover the refrigerant from the compressor, close the suction and discharge stop valves and the stop valve in the downstream of the oil filter of the oil supply line, and shut off the main power to the motor, heater power, and power to the control panel.

If the inoperative period lasts for a month or longer, perform the following services once per month:

- Measure the pressure of the system;
- Check for any leak of refrigerant from each section of the system; and
- Turn the compressor shaft (at least 10 turns).

When the compressor package unit is to be operated after being inoperative for one year or longer, check for any refrigerant leak and replace the oil.

In addition, open each head cover, hand hole cover, and seal cover to check the inside. At that time, supply sufficient oil to the opened parts and change the O-ring of mechanical seal.

Measure the insulation resistance of the motor to confirm that it can be run without problems.

Apply power to the oil heater at least one hour prior to starting the operation. Also, before starting to operate the system, check the temperature and pressure inside the package unit to make sure that the refrigerant is not condensed in the package.

Chapter 5 Maintenance and Inspection

5.1 Safety Precautions for Maintenance and Inspection

- After completing the refrigerant recovery work and before working on the maintenance and inspection, be sure to shut off the main motor power, control power, and other power to each equipment and valve. After they are shut off, be sure to make the switches inoperable by others. Also, be sure to attach notification tags to prohibit operation (lock-out/tag-out).
- When any manual stop valve has been closed, be sure to make the valve inoperable by others and put a notification tag to prohibit the operation (tag-out).
- Disassembly, inspection, and handling of the compressor shall be performed only after the disassembly and assembly procedures have been sufficiently understood. This manual is not intended to provide complete disassembly and assembly procedures for the compressor. Instead, it describes only the important points regarding the maintenance service of the compressor.
- If complete disassembly and assembly of the compressor are required, please contact your nearest sales office or service center of Mayekawa.
- Be sure to use only MYCOM genuine parts for replacement. Using anything other than genuine parts may result in an unexpected problem.
- Do not convert or modify the compressor or its components without prior permission from Mayekawa. Otherwise, it can lead to a damage of the compressor or failure to maintain the function of the compressor.
- When disassembling or assembling the compressor, use the specified tools properly.
- When the compressor is to be overhauled, check that the internal pressure of the refrigerator is at the atmospheric pressure before starting the work.
- Make sure that the temperature of the high temperature sections such as head covers and discharge lines is at normal ambient temperature, before working on them.
- Whenever handling a heavy object, take sufficient care and use effective support tools such as stud bolts (safety bolts).
- When handling a heavy object, use a crane or other lifting device. Otherwise, the work must be done by at least two people.
- When two or more people are to work together, be sure to mutually check the respective roles in the work and always keep track of the other workers' actions.
- Each power must be turned on and off carefully by a qualified personnel, for not to cause electric shock accidents.
- If qualification is required in working on other electrical equipment or structure, be sure to have the work carried out by a qualified person.

5.2 Maintenance and Inspection List

5.2.1 Daily Management

For the purpose of daily maintenance, check the items listed in Table 5-1 "Daily Inspection Item" and record the results.

By regularly recording the daily operational data in an operation log, it should be able to detect any significant change in the system. This practice is particularly effective in preventing possible failures of the compressor.

It is particularly important to keep track of the records that indicate the relationship between the temperature and pressure, as it is closely related to the evaporation and condensation of the refrigerant, in quickly finding any abnormal condition of the compressor or the system.

Keeping an operation log can facilitate the efforts to properly track down the cause of failure or accident that may occur in the compressor or the system, making it easier to quickly and accurately deal with the situation.

Table 5-1 Daily Inspection Item

Item			Inspection details	Remarks
Compressor	Hours of operation	hr	Total hours of operation	• Used to determine the timing of regular maintenance and inspection
	Suction pressure	MPa	Difference from the specified pressure for the specified evaporation temperature	• Cleanliness of the cooling pipe surface • Temperature and flow of the items cooled
	Discharge pressure	MPa	Difference from the condensation pressure for the specified cooling water temperature	• Cleanliness of the condenser cooling pipe • Mixing of non-condensing gas • Amount and temperature of the cooling water
	Oil supply pressure	MPa	Difference from the suction pressure	• Whether the differential pressure is decreasing or not • Liquid flow-back operation • Wear of compressor parts
	Suction temperature	°C	Whether upper/lower limit temperatures are not exceeded	• Temperature and flow of the items cooled
	Discharge temperature	°C	Whether it is within the upper limit temperature	• Mixing of non-condensing gas • Supply oil temperature, insufficient amount of oil • Failure of the compressor
	Supply oil temperature	°C	Whether upper/lower limit temperatures are not exceeded	• Cleanliness of the cooling pipe of the oil cooler
	Oil level in the crankcase	-	Whether upper/lower limits are not exceeded	• Note that the apparent oil level rises if the refrigerant is highly absorbed in the oil.
	Leakage from shaft seal	mL/h	Amount of leak per hour: • Normal leak ≤ 3	Guideline for inspection: • Overhaul ≥ 9
	Noise and vibration	-	Abnormal noise or vibration	• Failure of the compressor/motor • Problems with belts/coupling
	Cooling water hose	-	Water leak, disengagement	
Others	Motor current	A	Whether it is increased from the time of the commission	• Failure of the compressor
	Temperature inside machine room	°C	Whether it is within the acceptable temperature range for the motor	• Overheating and failure of the motor
	Liquid level of the liquid receiver	-	Liquid level height	• Add refrigerant
	Refrigerant leak check	-	Any refrigerant leak	• In the machine room and in the facility on the load side

■ Unless otherwise specified, the pressure unit "MPa" represents the gauge pressure in this manual.

5.2.2 Regular Inspection

Conduct inspection for the following items according to the specified schedule.

In addition, regarding other related items such as any safety devices, gas leak detectors, or other utility (gas/electricity) protection devices that constitute the cooling system together with the compressor, even if they are not directly connected to the compressor, any regulatory requirements that require inspection and recording of the results must be observed according to the instructions provided.

Table 5-2 Regular Inspection Items

Inspection Item	Inspection interval	Remarks
Tension and degradation of belts	Monthly	To be replaced if any abnormality is found
V-pulley set bolt loosening	Monthly	When a loosening is found, retighten it.
Suction filter and Oil filter (Inspection and Cleaning)	100- and 500-hour intervals after starting the initial operation	
	After that, shall be performed at 3000 hours interval.	
Pressure gauge/pressure sensor	Yearly	To be replaced if any abnormality is found
Thermometer/temperature sensor	Yearly	To be replaced if any abnormality is found
Protection devices and safety valves	Yearly	To be replaced if any abnormality is found
Lubricating oil (Analyze or Replacement)	Replacement; after 100 hours of operation since the initial operation	
	Analyze or replacement; after 500 hours of operation since the initial operation	We recommend oil analyze because that is as effective to understand the condition of the package unit. Replace the oil if the analysis result does not satisfy the management criteria in Section 4.1.6 "Management Criteria of the Lubricating Oil".
	Analyze or replacement; at the same time as the oil filter inspection and cleaning, or at every six months	
Motor greasing	Follow the instruction manual for the motor	
Filters and other components in the cooling water system	Yearly	To be cleaned if not clean enough
Shaft seal	Every year or every 6000 hours of operation	To be replaced if any abnormality is found
Direct coupling	Every year or every 6000 hours of operation	To be replaced if any abnormality is found

■ **The inspection shall be performed according to the calendar time or operating hours, whichever comes first.**

5.2.3 Compressor Overhaul

5.2.3.1 Guideline for the Overhaul Timing

CAUTION

- **The required frequency of compressor overhaul will vary depending on the compressor model, refrigerant, rotating speed, usage condition, state of system, and type of oil. The cost of parts replacement will be charged to the customer even if the part failure occurs before reaching the overhaul time listed in this section.**
- **Replacement of consumables used in the L-series compressor shall normally be made at the time of overhaul.**

The recommended overhaul timing is shown in the table below as a guideline.

Here, it is assumed that:

(1) The operating condition is within the specified operation range, and

(2) The number of start/stop cycles is within the specified limit.

Table 5-3 Guideline for the Overhaul Timing

Type of inspection	Recommended timing
Level 1 overhaul	6000 hours of operation or one calendar year, whichever comes first
Level 2 overhaul	12000 hours of operation or two calendar years, whichever comes first

5.2.3.2 Level 1 Overhaul

Remove each cover plate, head cover, and hand hole cover and take out the pistons and connecting rods. If no abnormality is found, it is unnecessary to remove the crankshaft or the bearing housing.

Table 5-4 Level 1 Overhaul Items

Part No.	Inspection point	Action
2	Crankshaft pins	Inspection and replacement if any abnormality is found
29	Thrust bearing	Inspection and replacement if any abnormality is found
32	Shaft seal	Inspection and replacement if any abnormality is found
61	Cylinder sleeve	Inspection and replacement if any abnormality is found
71,72	Suction valve and spring	Replacement
82	Roll bushing for connecting rod	Inspection and replacement if any abnormality is found
84	Connecting rod bearing halves	Replacement
85	Piston	Inspection and replacement if any abnormality is found
86	Piston pin	Inspection and replacement if any abnormality is found
89, 90, 100	Piston ring and oil control ring	Replacement
110,116	Discharge valve and spring	Replacement
119	Oil filter	Cleaning
178	Suction filter	Cleaning
-	Water cooling jacket cover and water side of the oil cooler	Cleaning
-	Gasket	Replacement
-	O-ring	Replacement
-	Lubricating oil	Replacement
-	Motor grease	Refer to the instruction manual of the motor.

5.2.3.3 Level 2 Overhaul

The level 2 overhaul items are listed in the table below. Remove the crankshaft and main bearing head.

Table 5-5 Level 2 Overhaul Items

Part No.	Inspection point	Action
2	Crankshaft	Inspection and replacement if any abnormality is found
2	Crankshaft pins	Inspection and replacement if any abnormality is found
12	Main bearing	Inspection and replacement if any abnormality is found
29	Thrust bearing	Inspection and replacement if any abnormality is found
32	Shaft seal	Replacement
61	Cylinder sleeve	Inspection and replacement if any abnormality is found
71,72	Suction valve and spring	Replacement
82	Roll bushing for connecting rod	Replacement
84	Connecting rod bearing halves	Replacement
85	Piston	Inspection and replacement if any abnormality is found
86	Piston pin	Replacement
89, 90, 100	Piston ring and oil control ring	Replacement
110.116	Discharge valve and spring	Replacement
119	Oil filter	Cleaning
178	Suction filter	Cleaning
-	Water cooling jacket cover and water side of the oil cooler	Cleaning
-	Gasket	Replacement
-	O-ring	Replacement
-	Lubricating oil	Replacement
-	Motor grease	Refer to the instruction manual of the motor.

5.2.3.4 Level 3 Overhaul

In addition to the level 1 and level 2 overhaul items, replace the valve plate [No. 73] and discharge valve sheet [No. 111] when reaching 24,000 hours of operation or 4 years, whichever comes first, as a guideline.

5.3 Preparation for Overhaul

5.3.1 Replacement Parts

Prepare the required MYCOM genuine parts according to Section 7.2 "Parts Configuration Table" in this manual Chapter 7.

All the O-rings and gaskets of the parts disassembled during the overhaul work must be replaced by new ones as they can be easily damaged in the disassembly process.

When ordering parts, be sure to inform the (a) model name, (b) serial number, (c) part name, (d) part code, and (e) quantity required to our sales offices or service centers.

In particular, when the serial number (b) is unknown, the details of design and manufacturing specifications cannot be identified, and thus the required part can hardly be selected.

5.3.2 Disassembly Tools and Workplace

Before proceeding with the disassembly work, prepare necessary disassembly tools for the L-series compressor by referring to Chapter 7, Section 7.8 "Disassembly Tools" in this manual.
In addition, other general purpose tools and materials such as hammers, pliers, files, fine sandpapers, bluish gray whetstones, etc., should be prepared as appropriate.

Furthermore, parts washing oil, lubricating oil, oil feeder, pail can for drain oil, waste cloth, etc., should be prepared.

In the disassembly/inspection workplace, temporary storage places to put the tools, disassembled parts, and replacement parts, workplace for the disassembly work, safety passages, and necessary off-limit signs shall be provided.

5.3.3 Refrigerant Gas Recovery

Before the disassembly work, the refrigerant contained in the product must be recovered for not to discharge it into the air.

There are a few methods of recovering the refrigerant. For example, one method is to operate the refrigerator, close the supply source valve, turn the gas into liquid, and recover the liquid at the receiver. Another method is to use a refrigerant recovery machine to recover the liquid. As such, choose the means that best meets your purpose.

Prepare a working flow sheet of the system beforehand. Prior to the recovery work, check the valves to be controlled during the recovery work by comparing them with the ones in the flow sheet, and clearly note the valves to be operated, other connected devices, and tubes on the flow sheet.

Two flow sheets must be prepared, i.e., one at the foreman and the other for posting in the workplace.

In addition, prepare a work procedure document for the refrigerant recovery work to reflect the actual conditions of the workplace, and sufficiently share the work details among all the coworkers through checking and confirmation before actually starting the work.

WARNING

- **Before the work, be sure to check and communicate the work details and procedures among all coworkers, and carry out hazard prediction activities based on the information shared. Neglecting to do this will increase the risk of on-the-job accidents and injuries to a considerable level.**
- **All the valves that have been opened or closed during the work must be prevented from accidental operation through proper lock-out and tag-out procedures.**

If the lubricating oil used is compatible with the refrigerant, a large amount of refrigerant should be contained in the oil. Accordingly, after the refrigerant has been recovered once, the refrigerant contained in the oil will be evaporated to increase the pressure inside the crankcase. As such, be sure to recover the refrigerant repeatedly for a few times, until the pressure becomes low and no more increased.

After completing the recovery work, shut down the related drive power and control power, and securely carry out the lock-out and tag-out procedures.

5.3.4 Discharging the Lubricating oil and Cooling Water

After completing the refrigerant recovery work, fill the crankcase with air to reduce the internal pressure down to the atmospheric pressure. Then, connect a hose to the oil supply and discharge valve, prepare a container to receive the oil, and then drain the oil. Also, discharge the cooling water from the water drain plug or water drain valve.

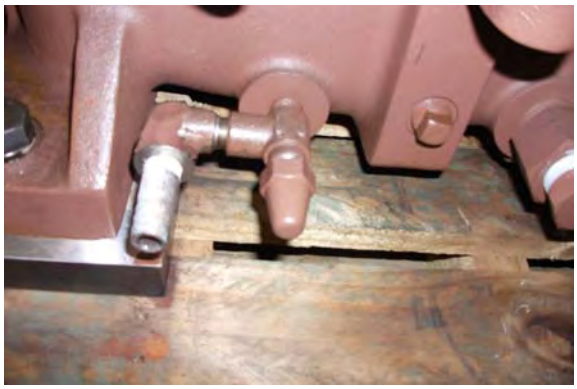

Oil Supply and Discharge Valve

5.3.5 Removal of V-belt or Coupling

a) Disengage the V-belt or coupling to separate this product from the motor.

b) Remove the pulley or the coupling hub on the compressor by using a pulley extractor. As the shaft is tapered, it is easy to remove the unit by slightly loosening it.

c) If a flange type motor or water-cooled semi-closed motor is used, refer to the instruction manual of the package unit or motor. If the overhaul is only for the compressor, keep the motor as it is.

WARNING

- **The V-pulley (or the coupling hub) is a heavy component. The removal work must be performed by a number of people appropriate to carry the weight.**
- **The V-pulley may slide and drop when it is loosened, and thus be sufficiently cautious in handling it.**

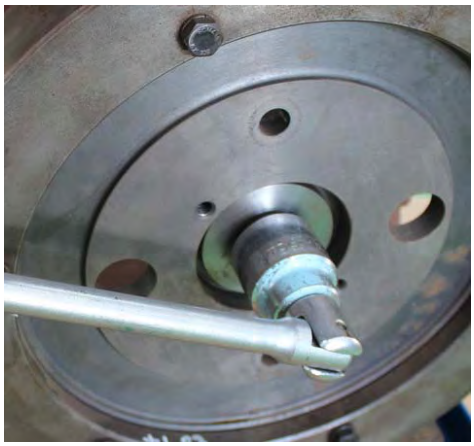

Removal of the Coupling Hub

5.4 Disassembly

5.4.1 Removal of Cooling Water Pipe

On the water-cooled head cover, each jacket of the compressor is connected with a braided high pressure hose.

As the braided high pressure hose is tightened by a hose band onto the hose nipple, loosen the hose band to remove the hose.

If the hose nipple is connected by a flange, it should be easier to remove the flange than to loosen the hose band.

Note that if the braided high pressure hose is a black one, it can not be reused once removed.

5.4.2 Removal of Head Cover

While the standard L-series models do not employ head springs unlike other series of reciprocating compressors, some special L-series models may employ a head spring. Thus, be sure to confirm the specifications of your compressor in advance.

WARNING

- **On the compressor with the head spring, the head spring may jump out while removing the head cover due to the spring force, which could result in injury. Pay sufficient attention to prevent such accidents.**

Either water-cooled or air-cooled head cover is used for the compressor. In the case of water-cooled head cover, if it is desired to clean the water side of the jacket, the jacket part can be removed from the head cover. When removing the jacket, be sure to start from the upper covers.

CAUTION

- **Dropping the head cover can cause injury or damage to the compressor. For your safety, be sure to use stud bolts during the work.**

a) Remove an upper bolt and screw in a stud bolt for safety to loosen other bolts. Then, after ensuring a clearance between the crankcase and the head cover, remove the bolts.

b) Lift up the head cover along the stud bolt to remove it.

Loosening the bolt

Inside of the water-cooled jacket cover

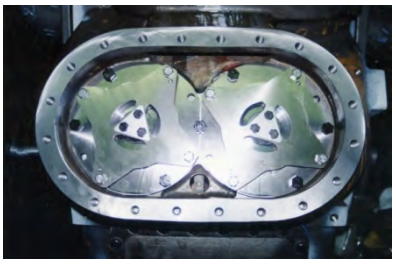

After removing the head cover

5.4.3 Disassembling the Valve Plate and Discharge Valve Assembly

The discharge valve is integrated in the discharge case assembly and fixed with two positioning pins and four bolts to the valve plate.
The bolts are partially for common use with the valve plate fixing bolts.

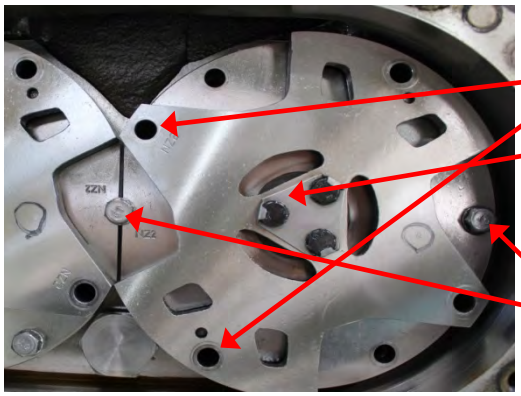

Bolts for concurrently fixing the discharge valve assembly and valve plate

Bolts for assembling the discharge valve seat and other components.

Valve plate fixing bolts

a) Remove the cage fixing bolts to remove the cage by lifting it up. The positioning pins may be fixed hard to remove. Carefully lift up the cage while keeping it horizontal so that the pins will not be bent.

b) The upper surface of the valve plate, after removing the cage, serves as the outer seat for the discharge valve. Be careful not to scratch the surface.

After removing the discharge valve assembly

Front and back sides
of the discharge valve assembly

c) The discharge valve cage and the seat are assembled together by three bolts. Lift up the claw of the lock washer on the bolt and remove each bolt. The seat is assembled with a single positioning pin. After removing the seat, the discharge valve can be removed. The discharge valve and discharge valve spring are fitted to the spring hole in the cage.

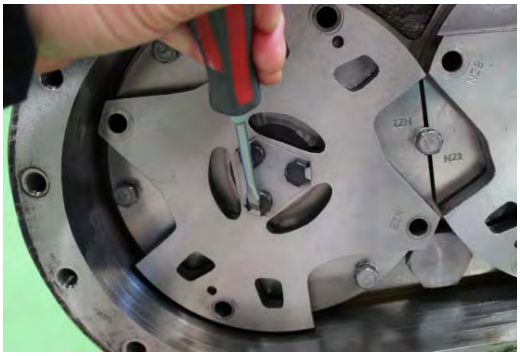

After removing the discharge valve assembly

Disassembling the discharge valve cage
and the seat

Component parts of the discharge valve cage

d) The valve plate is fixed to the crankcase by bolts. Its position in regard to the crankcase is determined by a pin and a mating hole on the cylinder sleeve flange.
Lift up the valve plate in the direction perpendicular to the fastening face.

Removing the valve plate

After removing the valve plate

Valve plate (front)

Valve plate (back)

5.4.4 Removal of Hand Hole Cover

a) Remove the upper center bolt on the cover and screw in a stud bolt for safety.

b) Remove all the bolts and separate the gasket from the crankcase.

c) The oil sight glass on the hand hole cover is sandwiched between the O-ring from both sides, and secured by the oil sight gland. When replacing the O-rings, tighten the bolts with a specified torque after replacement.

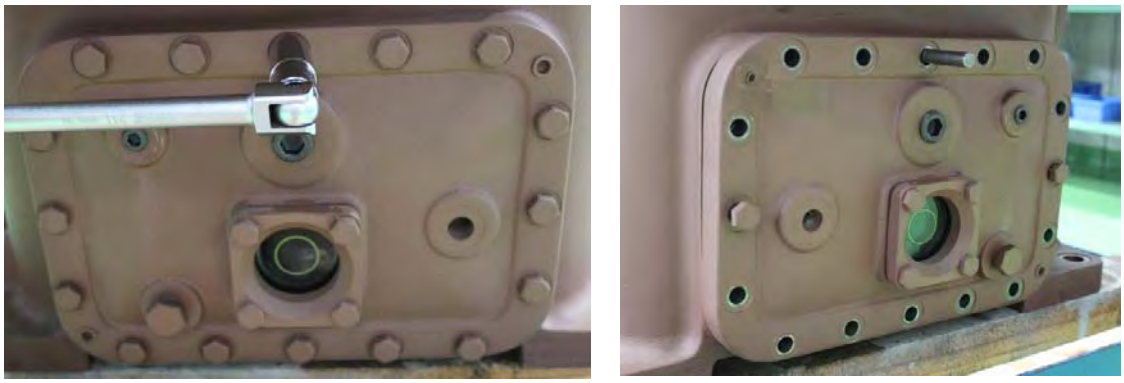

Removal of the hand hole cover

5.4.5 Loosening the Connecting Rod Bolts

a) Loosen the nuts of the bearing metal fastening bolts on the large end of the connecting rod. Use a socket wrench for loosening the nuts, while paying attention not to damage the thread.

b) Turn the crankshaft to allow the piston of the cylinder to be removed to reach its bottom dead center.

c) Remove the second nut of the connecting rod fastening bolt from the crankshaft pin part, and then remove the first nut. Be careful not to lose the fastening washers.

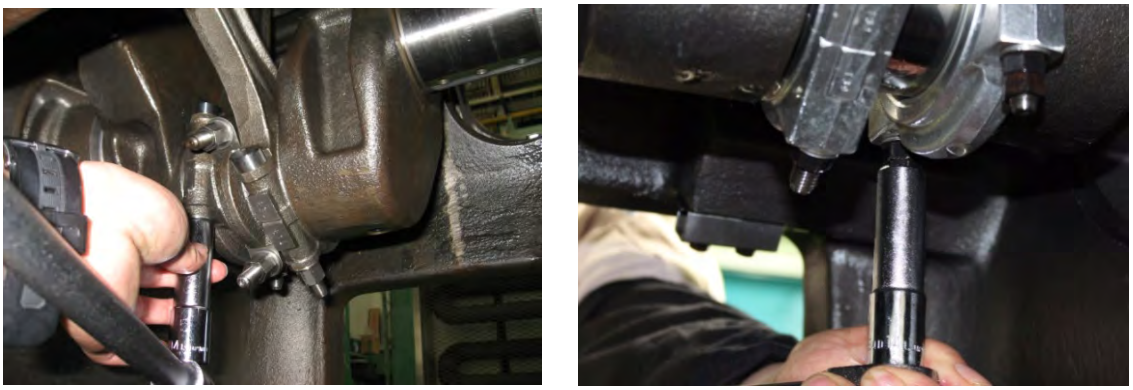

Loosening the connecting rod fastening bolt

d) Remove the connecting rod cap.

5.4.6 Removal of Cylinder Assembly

a) Screw an eye bolt into the threaded hole on top of the piston and pull up the eye bolt to allow the cylinder sleeve and the piston to be lifted together by the tension of the piston ring. As the cylinder sleeve is a heavy item, be careful not to drop it when removing the cylinder.

b) If you pull up the piston alone too much, the piston ring will go off upward and it will be hard to further disassemble. If you pull up the piston alone too much, the piston ring will go off upward and further disassembling becomes difficult. Be careful particularly when pulling up the piston of the inclined cylinders; the connecting rod bottom could be caught by the intermediate partition of the crankcase, resulting in scratches.

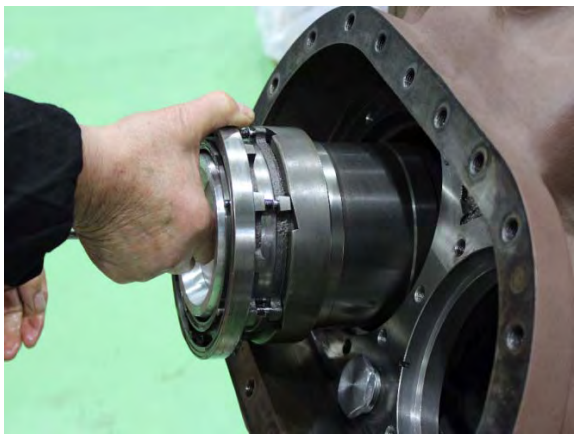


Removing the cylinder assembly

c) Remove all the cylinders in the same way. The cylinders should be put in order so that mounted position of each one can be identified. Place the rod caps, bolts and nuts together as a set.

d) Since the width of the large end of a connecting rod is wider than the inner diameter of the mating cylinder, remove the cylinder, piston and rod together as a set from the crankcase.

e) Place the cylinder assembly with the clylinder seat (flange side) down on a wooden or plastic board. Remove the rod fastening bolts in advance.

f) While retaining the cylinder sleeve with a hand and pull off the connecting rod by holding its large end.

g) There is no need of removing the retaining ring unless the cylinder or cam ring is required to be replaced.
The cam ring can easily be removed downward after the retaining ring in the lower groove is removed.
Every cam ring is fabricated from a cam having the left-downward slope.

h) The lift pin can be removed by pulling off the lift pin stop ring (E-ring) that prevents the spring from being disengaged. Be careful not to lose the spring.

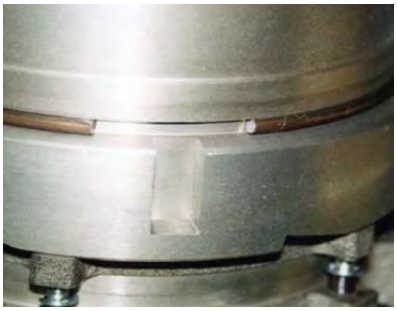

Retaining ring

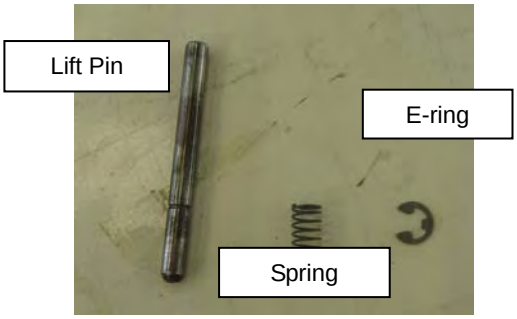

5.4.7 Removal of Piston and Connecting Rod

a) Place the piston upside down on the work surface.

b) Remove the piston pin lock spring using a proper tool such as a pair of pliers.


Removal of the lock spring


Removal of the piston

c) Remove the piston pin by pushing it from one side. If the piston pin is tightly engaged with the piston, lightly tap the pin with a piece of wood to remove it.

d) By removing the piston pin, the piston is separated from the connecting rod.
Do not remove the bearing halves at the large end from the connecting rod unless they are to be replaced.

【NOTE】

- Each connecting rod is marked with a three-digit number to indicate the combination between the main body and the rod cap. Also, the cylinder number is marked on the opposite side.
  Once removed, be sure to put them together as a set.

Combination number

Cylinder number


Connecting rod


Bearing halves

5.4.8 Piston Ring

Preferably, the piston ring should not be removed unless it is to be replaced. When removing the piston ring, be sure not to excessively widen the ring end gap.

To remove the piston ring, use a special tool as shown in the picture to the right. If no such tool is available, use a vinyl covered wire or lock tie to make a loop to pull both ends apart to widen the ring as shown.

CAUTION
● **Because if the piston ring is excessively widened during the removal process, it may become strained and distorted to cause oil loss, be sure to follow the above work procedure.**

Piston ring removal tool

Piston ring

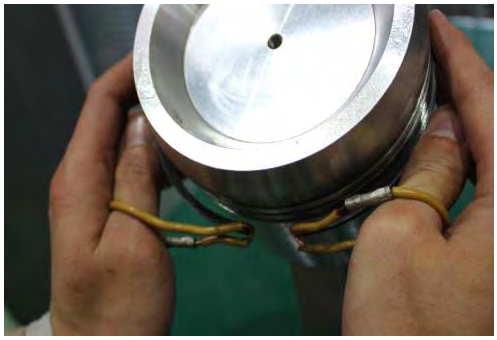

Removal of the piston ring

5.4.9 Unloader Mechanism

It is unnecessary to disassemble the unloader unless there is a problem with the unloader mechanism. When disassmbling, first remove the solenoid coil (by removing the bolt retaining the coil).

a) Remove the unloader piston cover fastening bolts to remove the unloader piston cover.

b) Pull out the unloader piston, unloader push rod, and unloader device spring.

c) The unloader push rods have different lengths depending on the cylinder position. Therefore, it is necessary to record the combination of the unloader push rod number and the corresponding cylinder number when the rod is removed. By this, possible assembly error can be prevented.

Unloader solenoid valve

Unloader piston

Unloader push rod

【NOTE】

- The components of the unloader mechanism are divided into the ones to be attached to the crankcase and the ones attached to the cylinder sleeve.

Unloader Components (to be attached to the crankcase)

Table 5-6 Unloader Components (to be attached to the crankcase)

Part No.	Part Name
135	Unloader push rod
142	Unloader device spring
143	Unloader push rod washer
144	Unloader push rod fastening bolt
145	Unloader piston

Unloader Components (to be attached to the cylinder sleeve)

Table 5-7 Unloader Components (to be attached to the cylinder sleeve)

Part No.	Part Name
62	Unloader cam ring (left downward)
65	Retaining ring
68	Lift pin
69	Lift pin spring
70	Lift pin stop ring (E-ring)

5.4.10 Shaft Seal

a) Oil is deposited inside the shaft seal cover. Prepare an oil pan underneath.

b) Loosen all the seal cover fastening bolts. When the gasket is not stuck, a gap is created between the cover and case by the seal spring force. Remove all bolts except for the two at the symmetrical positions, and then mount stud bolt s for safety before loosening the two bolts.
If the cover is stuck due to the gasket, loosen the bolts and move the cover by inserting an appropriate tool (ex.: scraper) between the cover and the body.

c) Pull off the shaft seal cover in parallel with the crakshaft direction.

d) The seal cover is attached with a floating seat together with an O-ring. This floating seat can be removed by pushing it from the outside of the cover. As this is made of a fragile material, be careful in handling it.

Shaft seal cover

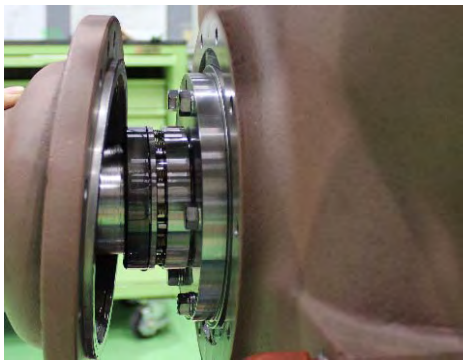

Removal of the shaft seal cover

e) Remove the shaft seal cover to see the mechanical seal assembly installed inside. The assembly is in contact with the shaft via the spring retainer that is positioned by an inserted pin. This assembly incorporates a seal ring, O-ring, drive collar and springs besides the retainer.

f) By holding the mechanical seal assembly with both hands and firmly pulling out the backmost seal collar, the entire assembly can be pulled off from the shaft.

g) As the mechanical seal assembly thus pulled out will readily scattered, put the parts together and keep them in order. Protect the sliding parts of the seal ring from being scratched.

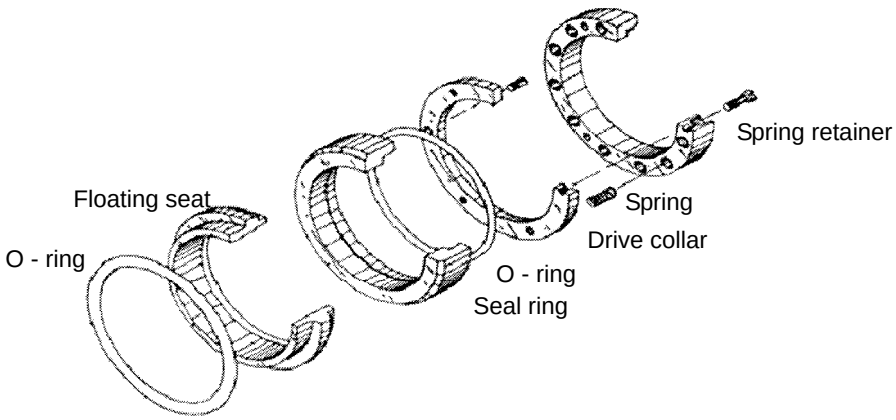

Figure 5-1 Mechanical Seal Assembly

5.4.11 Bearing Housing

a) Remove all the fastening bolts for the bearing housing.

b) On the flange of the bearing housing, threaded holes are provided for extracting the housing. Screw the removed bolts into these holes to separate the bearing housing.

c) When the housing is pulled out to a certain extent, it can be further pulled out by holding it with hands, but the crankshaft may be pulled out together with the bearing housing. Remove the bearing housing while holding the shaft from the seal side or through the hand hole, preventing the shaft from being pulled out.

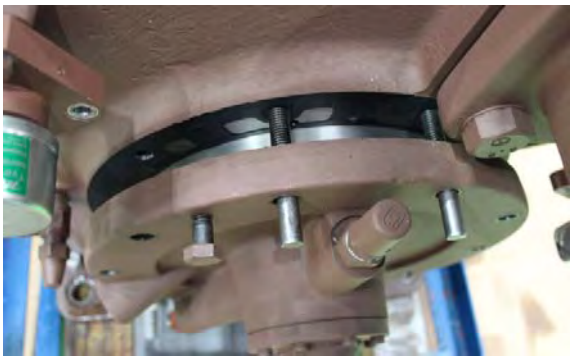

Removal of the bearing housing

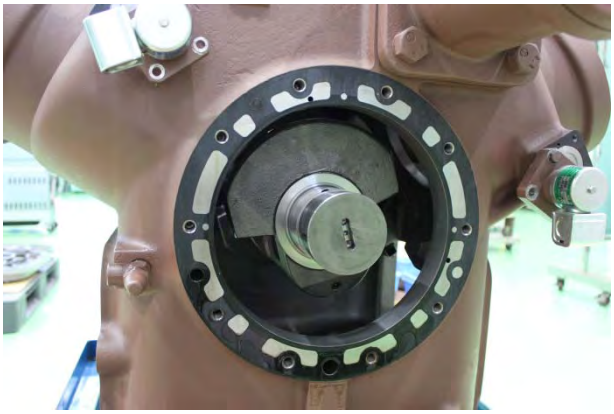

After removing the bearing housing

5.4.12 Main Bushing and Thrust Washer

The main bushing is a thin-walled roll bushing that is press-fit into the hole of the bearing housing. To replace the main bushing, replacing the entire bearing housing assembly is required.

The thrust washer is a ring-formed, lined metal sheet that is fixed by pins on the thrust face of the bearing housing.

To replace the thrust washer, use an appropriate tool with a tapered end to pry up the washer.

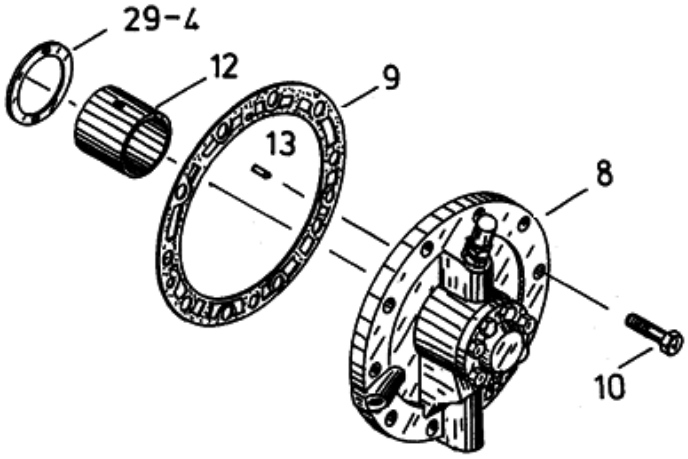

No.	Part Name
29-4	Thrust washer
12	Main bushing
9	Bearing housing gasket
13	Thrust washer fixing pin
8	Bearing housing
10	Bearing housing fastening bolt

Figure 5-2 Configuration of the Bearing Housing

Bearing housing and thrust washer

Main bushing

Thrust washer

5.4.13 Oil Pump

The oil pump is installed with the bearing housing.

When the performance of oil pump is degraded, replacing the entire bearing housing is required.

Oil pump

Removal of the oil pump cover

After removing the oil pump gears

Components inside the oil pump

The pump is a reversible trochoidal pump that delivers the oil in the fixed direction regardless of the rotational direction of the shaft.

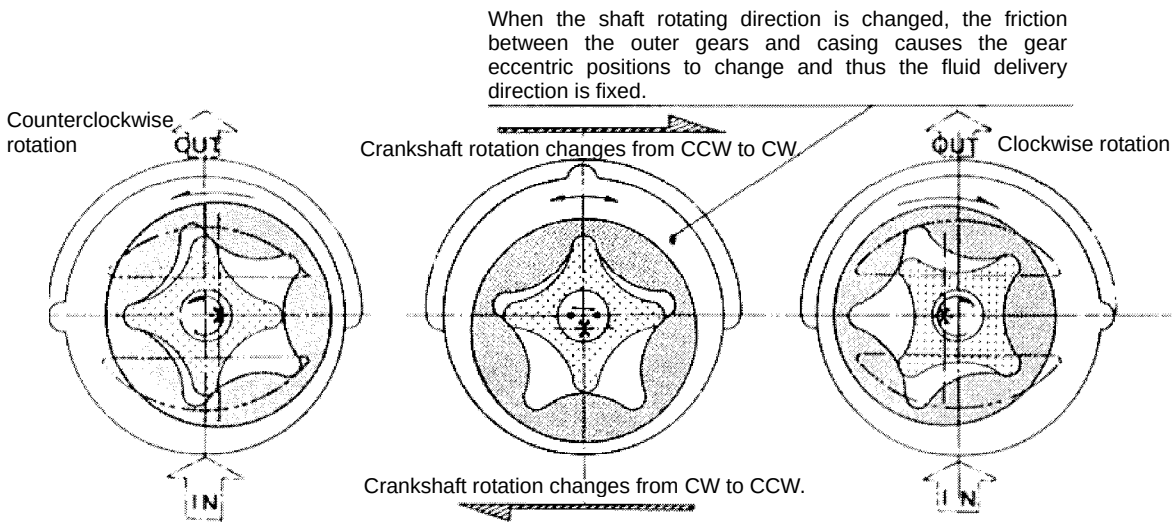

Figure 5-3 Reversible Trochoidal Pump

5.4.14 Crankshaft

When the bearing head is removed, the crankshaft is supported by one end, i.e., by the main bearing.

a) To protect the crank pin area from damage, sufficiently wrap the area with protective cloth, masking tape, etc.

b) By holding the both ends of the crankshaft, pull it out and place the balance weight of the bearing housing side on the mouting flange of the bearing housing.

c) Then place the central arm and pull it out by gradually displacing it as shown in the figure.

d) The removed shaft should be supported with a wooden V- block and store it while bearing should be protected from being scratched.

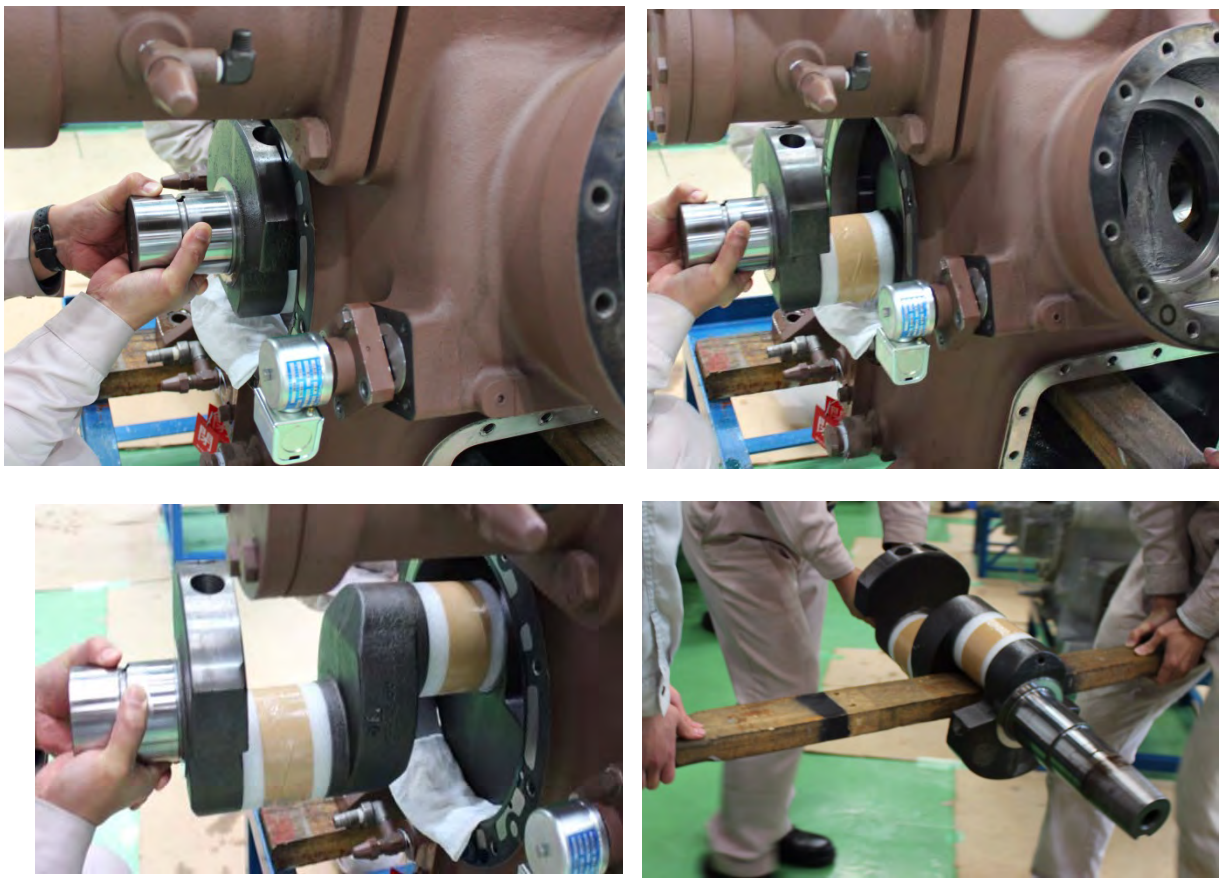

Removla of the crankshaft

5.4.15 Thrust Bearing and Thrust Washer

The thrust washer of L-series is fixed with bolts on the crankcase body on the seal side.

a) When replacing it, remove the bolts and pull them off.
If the thrust bearing is tightly stuck to the case and hard to be removed, screw each of the two bolts that have been removed into the extraction bolt hole and remove the bearing straightly while slighly moving it to left and right.

Loosening the fastening bolts

Removing the thrust bearing

b) Likewise, the bearing housing, the thrust washer on the seal side is fixed by the pins on the inside of the thrust bearing.

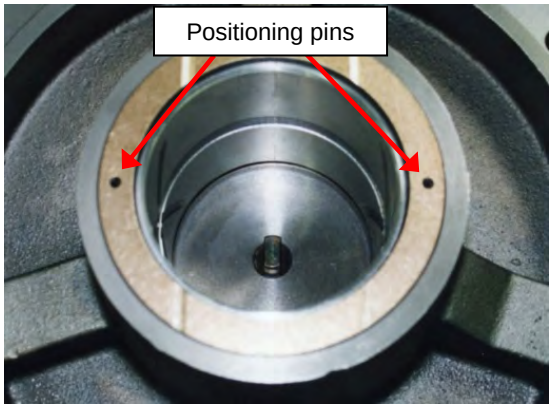

Thrust washer and thrust bearing

5.4.16 Oil Filter

The oil filter is mounted on the crankcase with a hexagonal nipple. Remove the oil filter from the nipple.
As the straining metal net has little strength, do not apply an excessive force to it.

Oil filter

5.4.17 Suction Filter

It is mounted inside the suction filter case. Be sure to clean the filter at the periodic inspection.


Removal of the suction filter

5.4.18 Internal Safety Valve

When an external safety valve is installed according to specifications, no internal safety valve is installed.
A plug-in type safety valve is installed on the wall in the border of high pressure and low pressure chambers inside the head cover. If the safety valve is activated, conduct troubleshooting and take required actions.
The valve may be activated at a low operation pressure due to deformation of the Teflon seat. If the seat is deformed, replace it with a new one.

Internal safety valve

After installing the internal safety valve

5.4.19 Gas Equalizer Assembly for Crankcase

A hole is provided to equalize the pressure difference between the suction chamber of the crankcase and the crankshaft chamber. And a gas equalizer assembly connected to this hole so that no oil drop from the crankshaft chamber will enter the suction chamber. This equalizer assembly does not need to be disassembled.
Note: Gas equalizer assembly is not drawn in Chapter 7, Section 7.1 "Development View of Parts".

Gas equalizer assembly for crankcase

5.5 Reassembly

WARNING

- **Be very careful when you carry a heavy piece of equipment. The work must be performed by a number of people appropriate to carry the weight. Also, be sure to use stud bolts (safety retention bolts) and other support tools for the work. Neglecting the above warning can lead to low back pain of the worker or injury due to dropping of the parts.**

CAUTION

- **During the assembly work on the compressor, use the correct tools specified. Using worn-out or damaged tools or tools inappropriate for the work increases the risk of personal injury.**

CAUTION

- **For the composition of the suction valve and discharge valve, refer to Chapter 7, Section 7.3 "Configuration of Plate Valves and Associated Parts" in this manual.**
- **When replacing parts, check the type and compatibility before the assembly work.**
- **If any minor defect is observed on the parts to be assembled, such as a minor scratch caused during disassembly or surface rust due to long-period storage, use a sand paper (#800 to #1200) to remove them.**
- **Assembly parts shall be washed using wash oil (e.g., light oil) and kept clean.**
- **Washed parts shall be dried by compressed air or wiped up using clean cloth. Do not use synthetic textiles or woolen textiles to prevent fibers from attaching the parts.**
- **Prepare new lubricating oil in an oil feeder and apply the oil to various sliding surfaces immediately before the assembly work.**
- **Apply a sufficient amount of lubricating oil on both sides of the gasket before assembly.**
- **Some gaskets have holes for oil supply purposes other than bolt holes. During assembly, carefully check the oil hole locations for not to block any oil supply line by a gasket.**
- **All tools used must be kept clean before use. Do not use worn-out, deformed, or damaged tools as they may cause damage to the assemblies and parts.**
- **When tightening the fastening bolts, first fasten four diagonally opposite bolts applying 50 percent of the tightening torque specified in the table below. Then, fasten all bolts in the clockwise order applying the specified torque. When fastening a part with a gasket, the bolts fastened earlier tend to become loose as the remaining bolts are fastened. Thus, be sure to tighten the first two bolts again.**

Table 5-8 Tightening Torque of Hexagon Head Bolts

Size		M10	M12	M16	M20	M22
Torque	N·m	40	80	120	160	300
	kg·cm	400	800	1200	1600	3000

* The tightening torques for the flywheel (pulley) set bolts, the first and second crank pin fastening nuts, and the first and second discharge valve fastening nuts are separately specified. Refer to the relevant figures in Chapter 7, Section 7.3 "Configuration of Plate Valves and Associated Parts" of this manual.

Start the reassembly work after completing the cleaning of the assembly parts and tools. Most of the reassembly work will be performed in the reverse order of the disassembly work. Perform the reassembly work by referring to the description in Section 5.5 "Disassembly" in this manual.

5.5.1 Crankcase

a) Carefully check that no foreign matter (abraded powders, cut chips, etc.) remains in the crankcase, particularly at the bottom where the oil tends to deposit; that no chips of old gasket remain on the surface on which the gasket is attached; and that no foreign matter remains in the bolt hole.

b) When the oil filter is removed, ensure that no damage or deformation is found in it after cleaning it.

c) Apply a wrench to the hexagonal nipple to mount the oil filter. Be careful not apply force to the filter element that is prone to be deformed.

d) Mount the suction filter [178].
Replace the suction filter cover gasket [180] with a new one.

5.5.2 Thrust Bearing

a) Identify the thrust bearing [29] and thrust washer [29-4] on the shaft seal side and apply oil to them entirely.

b) Position the Φ12 oil hole of the thrust bearing at the top.

c) The outer surface of the thrust bearing and the mounting hole on the case side are designed to allow the clearance fit, and thus can be pushed in by hand.

d) Tighten the M10 fastening bolts [30] for thrust bearing and washers [31] with a specified torque.

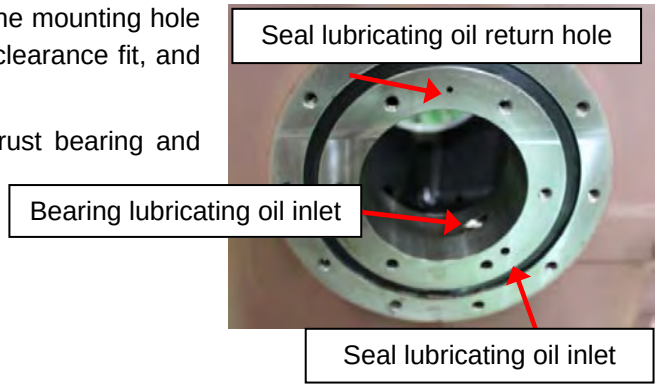

5.5.3 Crankshaft

a) Check again for any contamination in the lubricating oil inlet and for any flaw on the crank pin for mounting the connecting rod.

b) Protect the crank pin in the same way as during the disassembly.

c) Adequately apply lubricating oil to the crankshaft bearing.

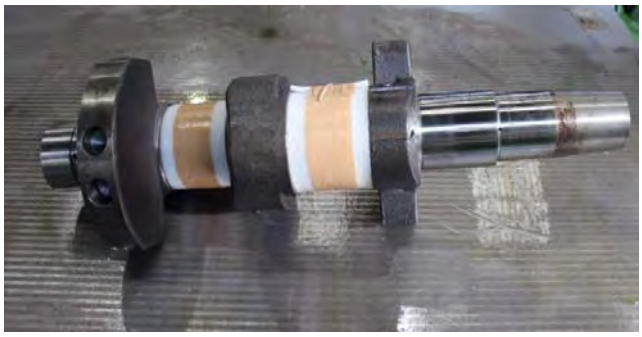

d) Place the balance weight of the crankshaft on the bearing housing flange part.

CAUTION
● **When conducting this work, the shaft tends to fall in the rotational direction. Support it firmly to prevent if from falling.**

Displacing the shaft

Guide it with the wooden base and put and allow it to enter the crankcase.

e) Then, move the shaft to allow the center arm to come in place. When one end of the shaft enters the bearing during this process, pay attention not to damage the bearing with the end of the shaft.

View from the hand hole

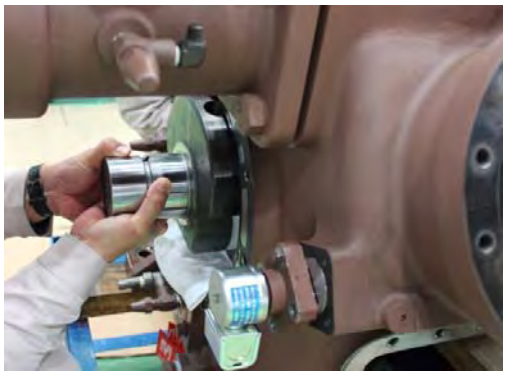

The shaft has entered by about 90%.

f) At a position where the balance weight on the oil pump side slighly rides on the flange, the bearing and the mating part of the shaft come in the proper fitting position. At this position, the shaft end is protruding on the seal side. Hold both ends of the shaft to insert it in the bearing. In this time, move the shaft in parallel to the shaft center.

g) Push in the shaft until it hits the thrust face.

View from the seal side with the shaft inserted

5.5.4 Main Bushing

Since the main bush [12] is press-fit in the bearing housing [8], it is difficult to replace the main bushing alone in the worksite while disassembling and inspecting the compressor. Thus, it is recommended to replace the bearing housing assembly as a whole.

If the main bushing has to be replaced alone on site, remove the oil pump first and detach/attach the main bushing by using a hand press or equivalent tool.

Avoid hitting the main bushing for insertion because it could cause the component deformation.

Main bushing

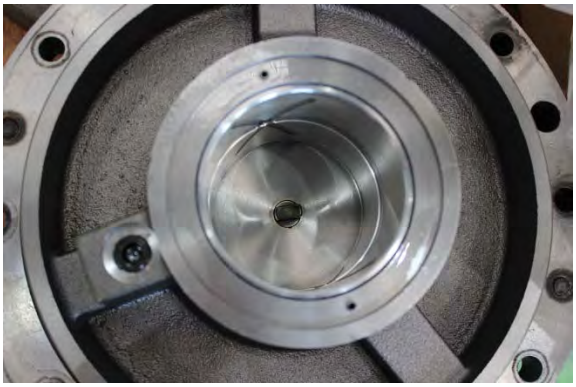

Bearing housing

5.5.5 Oil Pump

Do not disassemble the oil pump except when replacing defective parts.

When the performance of oil pump is degraded, replacing the entire bearing housing is required.

If the oil pump has to be disassembled, be careful not to lose the components, especially small springs and steel balls.

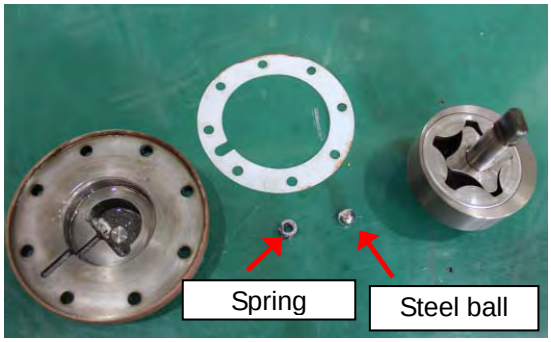

Component parts of oil pump

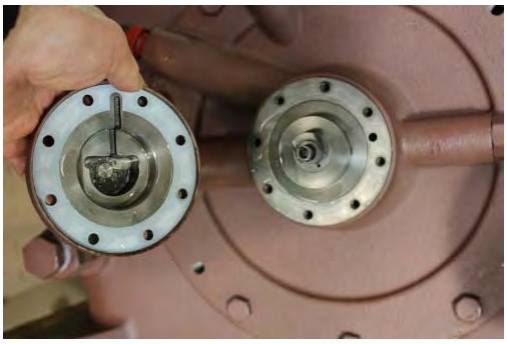

Before assembling the oil pump

5.5.6 Bearing Housing

a) First, fit the thrust washer [29-4] to the lock pin, and then assemble the bearing housing in the crankcase.

b) Apply oil to each sliding part.

c) When assembling the bearing housing, align in advance the concave part of the crankshaft and the convex part of the pump shaft so that the crankshaft groove can readily fit the pump shaft.

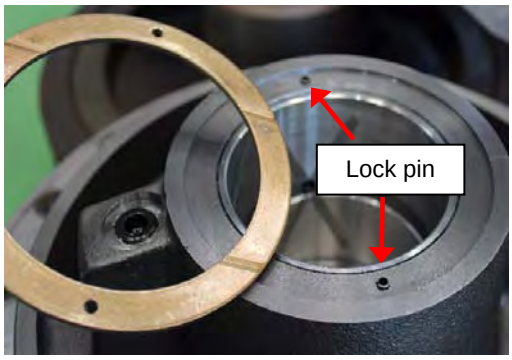

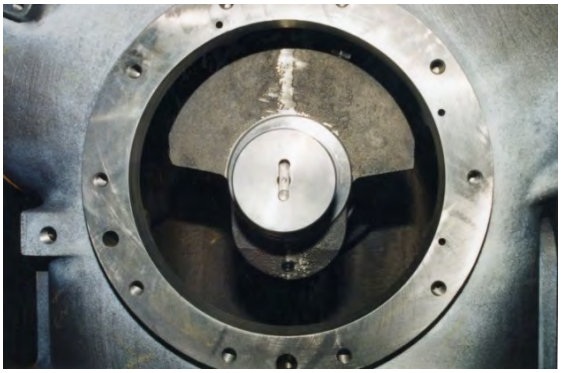

Aligning the shaft groove vertically

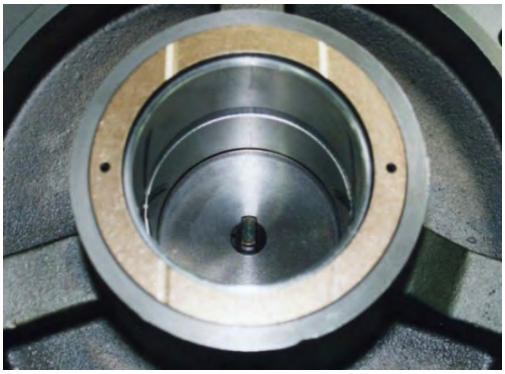

Aligning the pump protrusion vertically

d) Apply sufficient oil to the crankshaft bearing. Attach the bearing hosing gasket [9] to the flange of bearing housing, while paying attention to the position of oil inlet.

e) Fit the housing bushing to the crankshaft and push it in until it comes in contact with the crankcase.

f) Then, while slightly lifting up the bearing housing, press it into the crankcase.

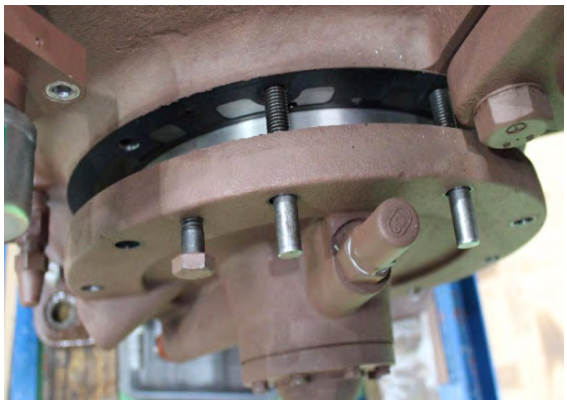

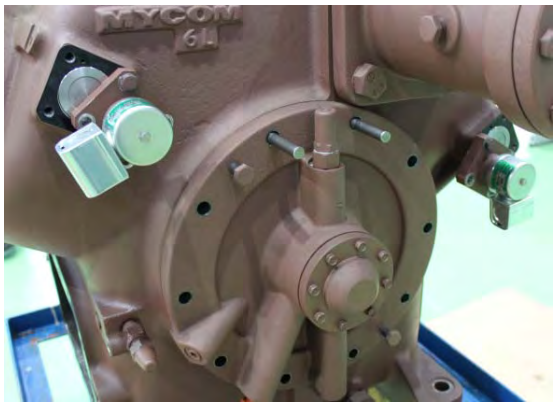

g) When it comes to the last 20 mm, the convex part of the pump shaft and the concave part of the crankshaft will fit together. Slightly move the bearing housing to right and left to fit the convex and concave parts together.

h) When the shafts fit together, lightly push them in. Tighten the bolts lightly, turn the crankshaft manually, and then tighten the bolts further to the specified torque.

5.5.7 Shaft Seal

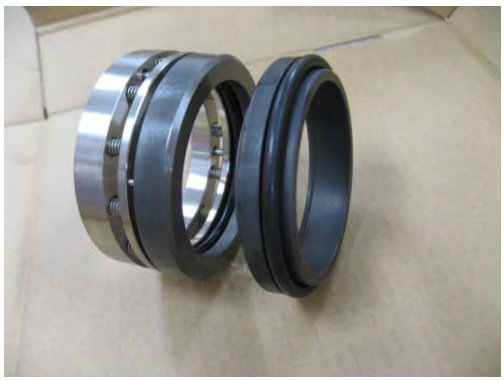


Mechanical seal assembly

a) Attach the floating seat to the shaft seal cover [26]. Apply oil to the O-ring, lightly fit it with fingers, and evenly press it to fix in position. Be careful not to damage the sliding surface.


Attaching the floating seat

b) Face the seal retainer lock pin of the crankshaft upward as well as the cut-out of the seal retainer of the mechanical seal assembly. Then, push the entire of the seal assembly to the shaft with hands evenly to assemble them by fitting the pin and cut-out exactly.

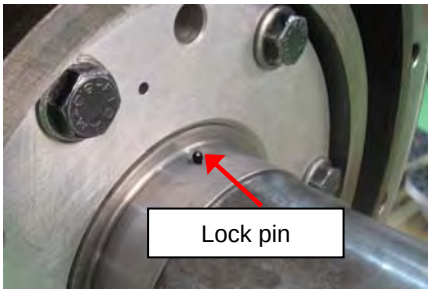

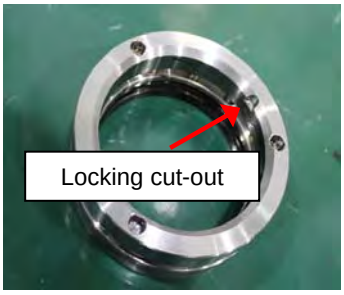

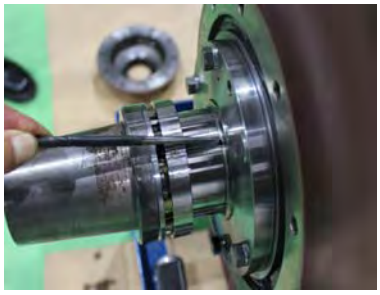

c) Screw the stud bolts (safety retention bolts) in the crankcase. After applying oil to the mechanical seal, assemble the seal cover while moving it in parallel with the shaft.

d) Gently push the seal cover while paying attention to prevent parts (particularly carbon) from being damaged, and after the sliding surfaces have come into contact, tighten the bolts in a symmetrical way.

e) Then, tighten all the bolts in the circumference to the specified torque.

5.5.8 Cylinder Sleeve

a) Place the cylinder sleeve [61] with its flange facing downward.

b) When replacing the cylinder sleeve, first drive the lock pin into the flange.

c) Attach the cam ring [62L] with its concave part upward and fix it with the retaining ring [65].

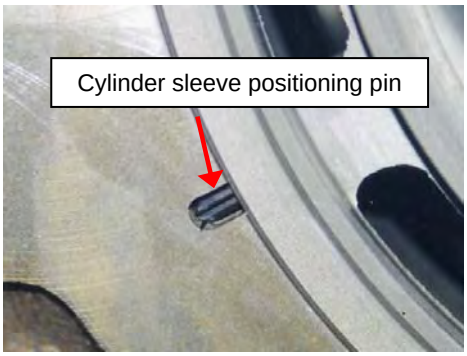

d) Then, mount the lift pin [68], lift pin spring [69], and insert lift pin stop ring [70] to prevent disengagement.

e) Turn the cam ring to align the cut-out slot in the cam ring and the lock pin.

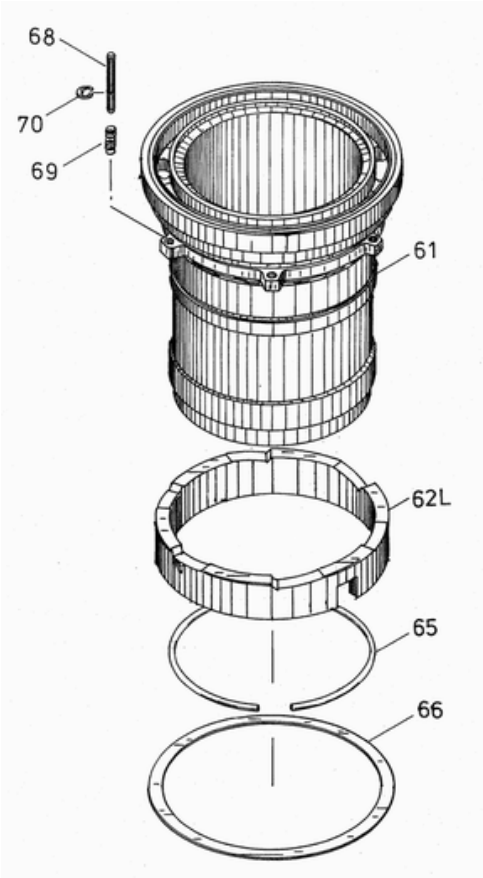

No.	Item Name
68	Lift pin
70	Lift pin stop ring (E-ring)
69	Lift pin spring
61	Cylinder sleeve
62L	Cam ring (left down)
65	Retaining ring
66	Gasket, Cylinder sleeve

Figure 5-4 Cylinder Sleeve Assembly

5.5.9 Piston and Piston Ring

a) Check the piston ring configurations for the L-series models by referring to the following table:

Table 5-9 Piston Ring Configurations of L-series

No.	Position	Item Name	Shape	Model
89	1st	Piston ring	with barrel face groove	FC-PC-BF-G1
90	2nd	Piston ring	Tapered	FC-T
100	3rd	Oil ring	with coil spring	FC-PC-CB3

b) Set the piston ring to the piston [85] carefully in the same method as in the disassembly procedure. Be careful not to twist the ring or excessively widen the end gap.
The piston rings have a marking on the end gap. Install the piston rings from the bottom one (3rd → 2nd → 1st), with the marking facing upward.

c) After setting all piston rings, check that each piston ring can freely move in the groove. A twisted ring causes reluctant motions.

d) The end gap positions of piston rings shall be separated by 120 degrees with each other.

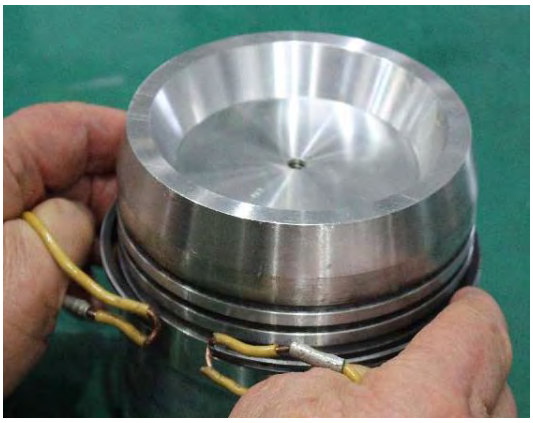

5.5.10 Piston and Connecting Rod

a) Use the piston pin [86] to attach the piston to the small end of the connecting rod [77].
Each connecting rod is marked with the combination number and the cylinder number. The piston must be attached to the connecting rod such that the orientation of the cylinder number marked on top of the piston becomes the same as the orientation of the of combination number marked on the connecting rod.

CAUTION
● **Do not hit the piston pin directly by an iron hammer even if it is tight, as the end face may be enlarged. Use a soft hammer or a pad, such as a Teflon block, for not to directly hit the pin, and handle it with care.**

b) After inserting the piston pin, set the piston pin lock spring [87] in the ring groove of the piston pin hole on both sides of the piston. Make sure that the piston pin lock spring is securely engaged in the ring groove on both sides.

c) Attach the bearing halves onto the large end of the connecting rod. The bearing halves are designed to fit with the large end of the connecting rod by its own tension.
Align the protrusion at the end of the bearing halves with the notch in the large end of the connecting rod and press the bearing halves into place.
The bearing halves consists of the upper metal bearing [84U] with an oil groove and oil hole and the lower metal bearing [84L] without any oil groove or oil hole.
Fit the upper metal bearing to the connecting rod body and fit the lower metal bearing to the rod cap of the connecting rod.

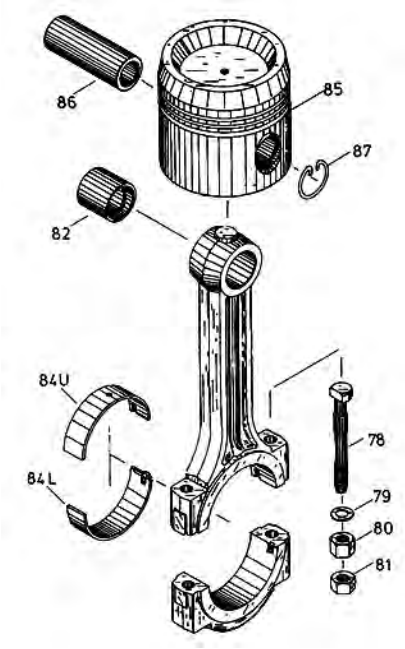

Figure 5-5 Piston and Connecting Rod

5.5.11 Cylinder Sleeve Assembly and Piston Rod Assembly

a) Turn the cylinder sleeve assembly to extract the lift pin out of the seat, and then raise the sleeve assembly with its seat side down.

b) Hold the rod of piston rod assembly, apply lubricating oil to the piston and then mount it in the cylinder. Mount the piston in the cylinder in such a way that by using the tapered portion of the piston ring on the cylinder bottom side and apply force to press the ring into the groove.

c) Refrain from excessively pushing the piston into the cylinder and stop the motion in the middle of the cylinder to return the cam ring to the original position.

d) Arrange the mounted assemblies in the order of mounting to the crankcase.

Assembling the cylinder and piston rod assembly

5.5.12 Installing the Piston and Cylinder Assembly in the Crankcase

If the unloader mechanism in the crankcase has been disassembled, reassemble the unloader in the reverse order of the disassembly procedure by referring to Section 5.5.5 "Unloader Mechanism" in this Chapter.

a) By pushing the unloader piston, adjust the positional relationship in such a way that the convex part of unloader push rod will come to the center of the hole for inserting the crankcase cylinder.

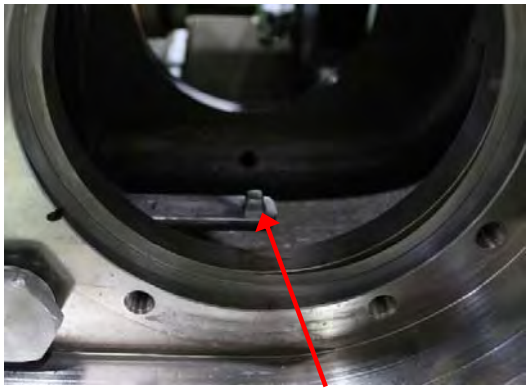

Aligning the push rod convex part with the center of the hole for the cylinder

Adjustment by pushing the unloader piston

b) Start assembling from the top cylinder on the crankcase. Reconfirm the cut-out slot position and the direction of sleeve lock nut.

c) Turn the crankshaft so that the crank pin of the cylinder for the piston and cylinder assembly will reach the bottom dead center. As viewed from the cylinder hole of the crankcase, the oil holes of the crank pin of the crankshaft will be seen in front of you.

d) Prepare the connecting rod cap that is paired with the connecting rod of the cylinder assembly to be assembled. Check that the three-digit combination numbers of the pair agree.

e) Lay the cylinder assembly on its side and screw the eye bolt of the disassembly tool into the thread hole at the center of the recessed area on the head of the piston.

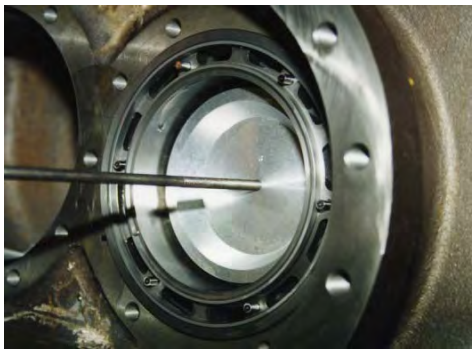

f) Align the cut-out of the cam ring with the protrusion of the unloader push rod of the cylinder being assembled onto the crankcase.
At this time, also set the cut-out portion of the retaining ring [65] to align with the cut-out portion of the cam ring.

g) Insert the piston cylinder assembly as a whole into the cylinder of the crankcase in due order, and adjust the sleeve lock pin and the crankcase groove until the cam ring cut-out slot and the push rod pin meet each other. Then, push the assembly into the cylinder.

h) Once the large end of the connecting rod of the piston and cylinder assembly has passed the inner hole of the crankcase, support the assembly by your hand from another cylinder hole on the crankcase while doing the assembling work.

i) Once the lip of the cylinder sleeve is inside the crankcase, hold the large end of the connecting rod in the direction of the crankshaft pin while gradually pushing down the piston to engage the large end to the crank pin.

CAUTION

- **If the piston is pushed without holding the large end of the connecting rod in the direction of the crankshaft pin, the bottom end of the connecting rod can easily hit the crank pin to give damage to it.**

j) Attach the connecting rod fastening bolts [78]. Set the cut-out portion of the bolt head (which prevents turning of the bolt) to the cut-out portion of the rod body.

k) Mount the rod cap by making sure that the orientation of the three-digit combination number on connecting rod cap is the same as that of the connecting rod body. Use your hand to attach a washer [79] to each of the connecting rod fastening bolts and then attach the nuts.

m) Alternately fasten the first connecting rod fastening nuts [80] and then tighten them with the specified torque.
Then, attach the second connecting rod fastening nuts [81] and tighten them with the specified torque.
When tightened to the specified torque, the inside diameter of the bearing halves will becomes a perfect circle.

n) Hold the nut of the assembled connecting rod and try to move it slightly to the right and left.

CAUTION

- **If the rod does not move to the right and left, it may be the case that the connecting rod cap is reversely mounted to the connecting rod or that the rod cap used is for a different cylinder, which should be ascertained.**

o) After completing the assembly of one cylinder, proceed to the assembly of the next cylinder.
Turn the crankshaft to the position so that the piston of the next cylinder to be assembled comes to the bottom dead center.
At this time, the cylinder sleeve is not fixed in place. As the cylinder sleeve can be easily lifted when the piston goes up, hold the lip of the cylinder sleeve while turning the crankshaft to a position convenient for the assembly.

p) Repeat the above procedure until completing the assembly of the last cylinder. When completed, check that there is no mistake in each part. After checking from the hand hole of the crankcase that the three-digit combination numbers of each connecting rod agree with each other, the work to mount the cylinder assemblies in the crankcase is complete.

5.5.13 Valve Plate

a) Set the suction valve springs [72] in the spring holes of the valve plate [73].
As the springs are slightly tapered, put the larger diameter end first in the spring hole, and then twist it in the winding direction to press in the spring into the spring hole.

b) If the cylinder to mount the valve plate has the unloader mechanism, push in the unloader piston first to set it in the loaded condition (push down the lift pin).

CAUTION
● **If the above procedure is not followed and the valve plate is assembled with the lift pin up, the suction plate valve can be easily broken or deformed to cause a failure such as no compression (gas leak).**

c) Fix the suction plate valve [71] to the plate [73] with your hands from the inside, and fix the valve with bolts while holding it with one hand. After ensuring that the suction plate valve is not misaligned, tighten the bolts.

Valve plate and suction plate valve

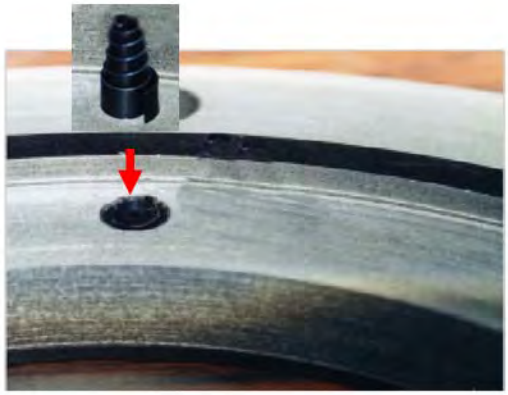

Suction valve spring (ex.: cone form)

Attaching the valve plate

d) After assembling the suction plate valve and valve plate, ensure that the suction plate valve is normally assembled by using a discharge valve assembly.
Mount the discharge valve assembly on the cylinder to be checked and manually turn the crankshaft to ensure that a compression sound can be heard. Conduct this check for all the cylinders one by one.

e) If no compression sound is heard, disassemble only the valve plate to check the suction plate valve.

f) Before proceeding with the next process, ensure that the same compression sound is heard after reassembling and thus no problem has occurred in the assembling.

5.5.14 Discharge Valve Assembly

a) Mount the discharge valve spring [116] into the discharge valve cage [109]. Push it in while twisting in the winding direction, just like the suction valve spring.

b) Mount the discharge plate valve [110] and retain it with the discharge valve seat [111]. Fit the discharge valve seat by using the central positioning pin [115].

c) Tighten the bolts [112] to fix the valve seat on the top of the cage. Be sure to fix the triangular turn stopper [112-2] with the valve positioning pin.

d) Tighten the bolts to the specified torque and check the valve motion. Also, check that the bolt head is flush with the top surface of the valve seat. If the head level of a bolt is lower than the valve seat surface, the bolt may be an incorrect one. On the contrary, if any bolt protrudes above the seat surface, it will hit the piston. After checking, bend up the edge of the turn stopper.

e) Fix the cage at the specified position on the valve plate. In this step, the valve plate is fixed with the bolts under the cage.

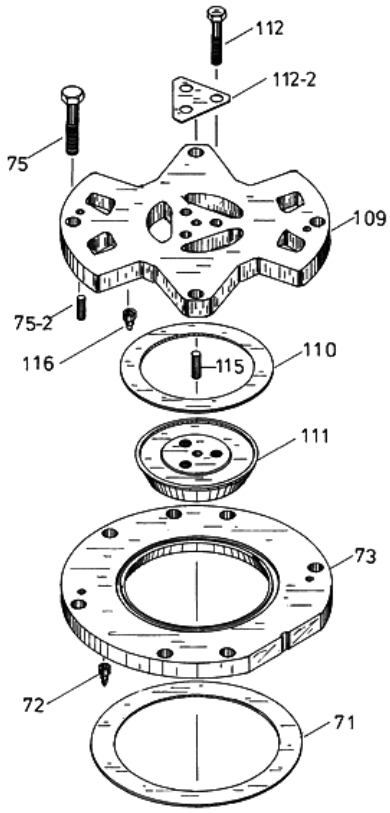

Figure 5-6 Valve Plate and Plate Valve

Discharge valve components

Checking the motion

Fixing the assembly

Bending up the turn stopper tips

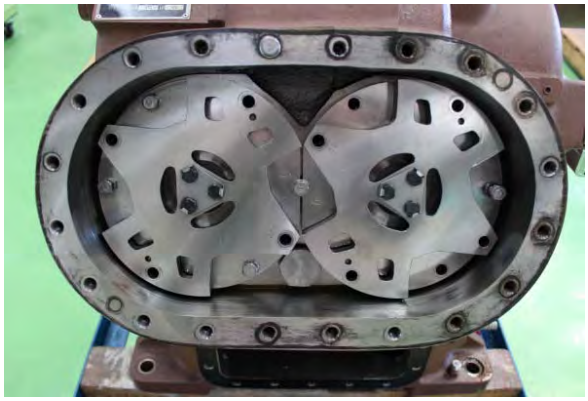

After finishing the assembling

5.5.15 Unloader Cover

a) Reconfirm the oil inlet in the crankcase and that for the unloader cover [146], and attach the cover.

b) When mounting the cylinder sleeve and the valve plate with the cover displaced in order to push the unloader piston (lower the lift pin), fix the cover with four normal bolts [149].

c) If the solenoid valve coil [205] has been removed, mount the coil.

Unloader cover and solenoid valve

5.5.16 Head Cover

CAUTION
● **When installing the head covers, be sure to start the work from the lower cylinders because working on the upper cylinder first may cause foreign matters to get into inside the lower cylinder.**

a) Screw the stud bolt for safety in the upper middle point on the head cover ([49] for air-cooled/[50] for water-cooled).

b) Attach the gasket [51] to the case, adjust the bolt hole in the head cover to the stud bolt, and attach the head cover. After tightening all the bolts [52] other than the stud bolt, remove the stud bolt and tighten the fastening bolts.

c) Screw in the bolts one by one diagonally, and finally tighten them to the specified torque.

d) If the head jacket cover [53] has been removed from the water-cooled head cover [50], reinstall it onto the said head cover.
In this, be careful about the position of the MYCOM marking and correct orientation of the cooling water pipe.
Assemble the unit with the end of the center rib of the head cover (see below left) facing the end of the center rib of the head jacket cover (see below right).
In the case of the standard specification, the cooling water inlet/outlet side of the head jacket cover will face the oil pump side of the compressor.

Head cover (water-cooled)

Head jacket cover

Tightening the jacket cover

5.5.17 Hand Hole Cover

a) Before mounting the hand hole cover, check that nothing is forgotten, such as proper tightening of the connecting rod fastening nuts, or any foreign matter in the crankcase.

b) There are two types of hand hole cover: with a window [45] and without a window [46]. Mount the hand hole cover with window [45] on the side where it is easier to check the oil level.

c) Mount the stud bolt for safety in the upper middle point of the hand hole in the case.

d) Attach the gasket [47] and hand hole cover, and then screw the hand hole cover fastening bolts [48].

e) After tightening all the bolts [48] other than the stud bolt, remove the stud bolt and tighten the fastening bolts to the specified torque.

Hand hole cover with a window

5.5.18 Oil Cooler and Piping

a) Place and incline the oil cooler in the oil receiving container to drain remaining old lubricating oil from the oil cooler.

CAUTION
● **In this operation, use a sufficiently large container so that the drained oil will not overflow. Also, fix the oil cooler during draining to prevent it from falling down.**

b) Connect the oil piping. Use a pair of wrenches so that the thread of piping connection will not be damaged and connect the pipes securely before fastening.

c) Mount the external oil piping.
Be sure to mount all the pipes that have been removed during disassembly, including the unloader pipe and pressure pipes of pressure gauges. Before assembling the pipes, use compressed air to blow out any foreign matters inside pipes and clean them. Securely tighten the pipe joints.

5.5.19 Cooling Water Pipe

The braided high pressure hoses shall be attached along the cooling line, by selecting proper length of the hose. In the case of black braided high pressure hoses, brand-new hoses must be used for each overhaul.

a) Attach the braided high pressure hose to the hose nipple after passing it through the hose band. When connecting the braided high pressure hose to the hose nipple, be sure to push in the hose end approximately 15 mm further than the last lock notch of the hose nipple as shown in the figure.

b) Clamp the braided high pressure hose by the hose band. The hose nipple has three notches to prevent disengagement. Securely tighten the hose band after setting the position of the hose band such that the two wires of the hose band will bite into the two notches on the nipple.
If the hose has been removed together with the flange, such as the one at the head jacket cover, replace the gasket on the flange with a new gasket. Also, after fastening the flange, check that the hose band is securely tightened as shown in the above right picture.

CAUTION
● **If the hose band is not sufficiently tightened, it can not only cause cooling water leakage, but also lead to spraying out of the cooling water on the motor or control panel when the hose is disengaged, to lead to a failure of such electric systems. So, be careful to securely tighten the band.** **Check the fastening condition of hose bands periodically.**

5.5.20 Airtightness Test and Evacuation

a) After the assembly work has been completed, use nitrogen gas to perform airtightness test of the compressor.
During the test, check that there is no leak from the gaskets, pipe joints, and plugs that have been worked on.

b) After the airtightness test has been completed, discharge the nitrogen gas in the compressor from the purge valve.

c) Connect a T-joint to the outlet of the compressor gas purge valve, connect a vacuum gauge at one end and vacuum pump suction inlet to the other end to perform the evacuation.

d) Fill the lubricating oil while the system is being evacuated.

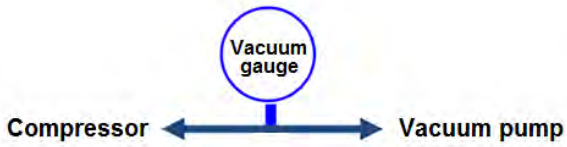

Figure 5-7 Connection for Evacuation

5.5.21 Lubricating oil Filling

a) Fill fresh lubricating oil. Confirm the brand of lubricating oil before filling.

b) Fill the oil cooler with the lubricating oil through the oil cooler inlet (initial oil supply valve) so that the lubricating oil will be fed to each sliding part upon the system startup.

c) After completing the lubricating oil charging, another evacuation is recommended.

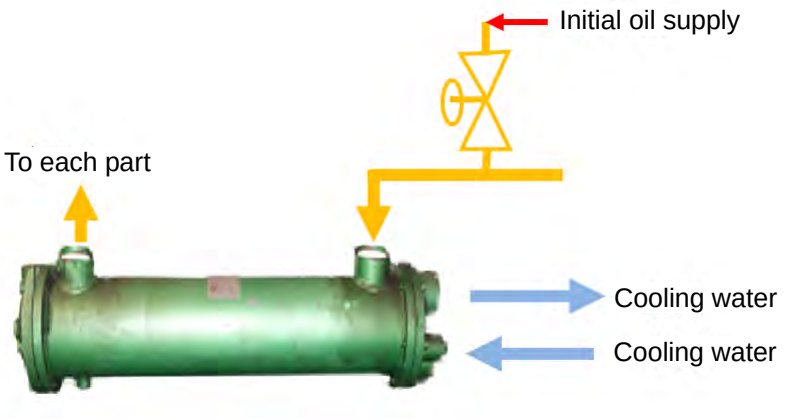

Figure 5-8 Charging Via the Initial Oil Supply Valve at the Oil Cooler Inlet

5.5.22 Connection with the Drive Unit

a) Mount the flywheel (pulley) or the coupling hub on the crankshaft and install the V-belts or the coupling assembly.

b) For your safety, be sure to mount the belt cover or the coupling guard.

Chapter 6 Troubleshooting

Table 6-1 Troubleshooting

■ The motor does not start

Symptom	Possible cause	Result	Action to take
The motor won't start with hum-sound	Motor failure	Circuit breaker is opened. Motor burnt out	Inspection, repair, or replacement
	The belt tension is too high.	Circuit breaker is opened. Motor burnt out.	Adjustment.
	Voltage drop	Circuit breaker is opened. Motor burnt out.	
	Failure or (near-)seizure of cylinder sleeve, piston, piston ring, or bearing metal (sealing) (if the pulley cannot be turned by hand after removing the belt.)	Motor burnt out. Seizure of sleeve, piston, and/or sealing device.	Inspection, repair, or replacement
	Poor or wrong wiring in the automatic control or (single phase) electrical system.	Burn-out of parts in the automated system or others.	Inspection and repair
No response when the magnet switch button is pressed.	The circuit breaker is opened.	Inoperable	Inspection and replacement
	Contact failure of the magnet switch, or protection switch is left activated.	Inoperable	Inspection, repair, or replacement
	Broken wire	Inoperable	Inspection, repair, or replacement
	After activation of OP (low oil pressure protection device) or HP (abnormal high pressure protection device), it is left as it is or not reset.	Inoperable	Reset the device.
The power turns on only when the magnet button is kept pressed.	Wiring error (in the automatic control system)	Inoperable	Inspection and repair
	Contact failure of any auxiliary contact, etc.	Inoperable	Inspection, repair, or replacement
The motor stops soon after the startup.	OP (low oil pressure protection device) has operated.	Inoperable Seizure of sliding surface of the compressor	
	(a) Insufficient amount of lubricant		(a) Supply oil.
	(b) Oil pressure is too low.		(b) Adjust the oil pressure.
	HP (abnormal high pressure protection) has operated due to excessively high discharge pressure.	Motor burn-out or inoperable	
	(a) The condenser is full of non-condensing gas.		(a) Purge non-condensing gas.
	(b) The suction pressure is too high.		(b) Reduce the load.

■ The motor does not start (continued)

Symptom	Possible cause	Result	Action to take
The motor stops soon after the startup.	Due to liquid flow-back, the oil pressure cannot be increased, and OP (low oil pressure protection device) has operated.	Inoperable	Inspection, repair, or operation adjustment. Replace the lubricating oil in the crank case, or supply warm oil after sucking the refrigerant in the crank case using another compressor.
	Wiring error between automatic control system and magnet switch.	Burn-out of control system components.	Inspection and repair
	Overload relay has operated, or the bimetal temperature of OP (low oil pressure protection device) is high.	Unable to startup	Wait until the bimetal is cooled down (about 5 minutes). In the case of OP (low oil pressure protection device), switch to manual operation to startup the motor and switch back to automatic mode after 10 minutes. Note that the cause of the failure must be identified and corrected.

■ Abnormally high pressure

Symptom	Possible cause	Result	Action to take
The condenser is warmer than normal	The flow of the cooling water is insufficient, or the water temperature is too high.	Operation of HP or safety valve, and increased power consumption	Increase the amount of cooling water, or lower the water temperature.
Head cover is overheated.	The flow of the cooling water is insufficient, or the cooling pipe is contaminated.	Operation of HP or safety valve, and increased power consumption	Adjust the amount of cooling water, or clean the cooling pipe.
Warm cooling water of the evaporator-condenser	Fan failure or clogging of spray nozzle or strainer	Reduced cooling capacity	Inspection, repair, or cleaning
The top of the condenser is warm, but the bottom is not. In addition, the crank case can easily get frosted.	The refrigerant or lubricating oil has accumulated in the condenser to reduce the cooling area.	Reduced cooling capacity	
	(a) Clogging between the condenser and receiver		(a) Inspection, adjustment, or removal of problem
	(b) Over charge of the refrigerant (refrigerant is contained in the condenser since the receiver is already full)		(b) Discharge the excess refrigerant.
The needle of the discharge pressure gauge swings and the condenser is somewhat warm.	(a) Air in the condenser, or failure of the discharge pressure gauge.	Reduced cooling capacity	(a) Purge the air from the air purge valve.
	(b) The oil separator is full of lubricating oil, closing the path of the gas.		(b) Discharge the excess lubricating oil.

■ Discharge pressure is too low

Symptom	Possible cause	Result	Action to take
The liquid pipe is frosted and suction pressure becomes vacuum	The liquid pipe or suction pipe is obstructed.	Reduced capacity	Valve adjustment, inspection, and cleaning
The crank case is frosted, and the head cover is also cold.	Wet compression due to excessive opening of the expansion valve (suction temperature is low due to liquid flow-back).	Liquid hammering may occur, and the discharge part of the compressor may be damaged.	Narrow the opening of the expansion valve while running the compressor.
Suction pressure is low, and some hissing sound is heard from the expansion valve.	Insufficient amount of refrigerant	No cooling	Fill the refrigerant.
Suction pressure is high.	Gas leakage due to wear of the suction plate valve, discharge plate valve, or piston ring.	Degraded capacity and baking of the sleeve	Inspection, repair, and/or replacement of the plate valve part and piston rings

■ The suction pressure is too high.

Symptom	Possible cause	Result	Action to take
Crankcase is frosted.	The opening of the expansion valve is too wide.	Liquid hammering occurs.	Operational adjustment (Narrow the opening of the expansion valve)
Increased current.	Increased load	Motor burnt out.	Operational adjustment
Discharge pressure is low. No frost on the suction side.	Degraded performance of the compressor (possible crack in the suction/discharge plate valve line, etc.) or gas leakage from the safety valve.	No cooling	Overhaul and parts replacement

■ Suction pressure is too low

Symptom	Possible cause	Result	Action to take
Cold room temperature or brine temperature is too high, compared with the level of suction pressure.	Insufficient amount of refrigerant or too narrow opening of the expansion valve.	No cooling	Charge the refrigerant or adjust the operational parameters.
Liquid flow-back occurs when the expansion valve is opened.	(a) Lubricating oil is contained in the cooling pipe. (b) Excessive formation of frost or ice on the cooling pipe	No cooling	(a) Discharge lubricating oil from the drain valve. (b) Remove the frost or ice.
Since the initial operation, the suction pressure has been too low for the cold room temperature or brine temperature.	The size of the cooling pipe and suction pipe is too small for the length or the resistance is too high.	No cooling	Investigate and improve any errors in the design or piping work.
Suction pressure is lower than it was during the initial operation.	Clogging of the suction filter		Cleaning

■ Abnormal noise during operation

Symptom	Possible cause	Result	Action to take
Generation of continuous metallic noise	(a) Existence of foreign matter in the compression block. (b) Damaged discharge plate valve, suction plate valve, and/or piston ring.	Possible damage to the discharge and suction blocks	(a) Disassembly, repair, and/or replacement (b) Disassembly and replacement
High temperature in the shaft seal area	Wear, seizure, or damage of the metal	Possible damage in the compression block or bearing wear.	Disassembly and replacement (note that the oil supply pipe may be clogged)
	Damaged oil pump	Possible wear	Stop operation, investigate the cause, and replace the part.
Crankcase is frosted.	Liquid flow-back	Damage in the discharge block and piston or bearing wear	Stop operation, investigate the cause, and replace the part. Narrow the opening of the expansion valve while running the compressor. If it is very severe, first close the suction stop valve and gradually open it.
High discharge noise from the head cover	Oil hammering	Damage in the discharge block and/or piston	Prevent oil loss (if it occurs together with liquid flow-back, also apply the above measures.)

■ Overheating of the crankcase

Symptom	Possible cause	Result	Action to take
Overheating of the head cover (when the discharge pressure is high and suction pressure is low)	Increased compression ratio (increased condenser temperature and/or refrigerant load)	Oil loss by burning and carbon attachment	Increase the amount of condenser cooling water or lower the water temperature.
	Carbonization of lubricant due to increased discharge temperature, accumulation of carbide, and the resulting blocking of the path of the gas.	Wear or damage of the metal or sleeve seizure	Disassembly, inspection, and cleaning or replacement
	Damaged discharge valve plate or gas leakage	Reduced cooling capacity	Disassembly, inspection, and replacement
	Gas leak from safety valve	Reduced cooling capacity	Decrease the discharge pressure or adjust the safety valve.
Increased oil temperature	Failure of oil cooler, insufficient lubricating oil, contamination of oil, or heating of pump due to clogging of oil filter.	Increased wear due to decreased oil viscosity	Clean oil cooler and increase cooling water. Replace lubricating oil. Clean the oil filter.
Impeded flow of the compressor jacket cooling water	Insufficient amount of cooling water or clogging in the water path	Wear or seizure of the metal and/or carbon attachment to the discharge block	Replace degraded lubricating oil, clean, and increase the cooling water.
The shaft seal part is especially hot.	Imminent seizure of the sliding part	Seizure or damage of the sliding part	Repair or replacement.

■ Excessive oil consumption

Symptom	Possible cause	Result	Action to take
Crankcase is easily frosted.	Lubricant foaming due to liquid flow-back. Particularly frequent during negative pressure operation.	Inoperable	Operational adjustment
No apparent abnormality is found	Closure of the pressure equalizing hole of the crankcase (or too wide opening in the case under the negative pressure operation) or clogging of the suction filter	Low oil pressure	Inspect and clean up the crankcase, or clean up the suction filter.
	Piston ring wear		Piston ring replacement
	Wear of the cylinder sleeve		Replacement
	Improper mounting of the piston ring		Reassemble it correctly.
	Missing to attach the pressure equalizing pipe		Attach it properly.
	Wear of the unloader piston case		Replace the piston case, or mount a rubber-lined special unloader
Head cover is overheated.	When the discharge temperature is increased, the amount of oil vapor increases.	Carbon deposit	Adjust the operation parameters to lower the discharge temperature.
The bottom of the separator can be touched by hand.	Clogged separator Failure of the float valve.	Low oil pressure	Inspection and adjustment
Oil level goes down after increased start/stop cycles	Too frequent start/stop cycles	Low oil level	Reduce the number of start/stop cycles.
Oil level goes down when unloaded	Phased unloading has not been performed (i.e., sudden unloading)	Foaming	Perform loading/unloading gradually.

■ No cooling

Symptom	Possible cause	Action to take
Suction pressure does not go down.	Insufficient capacity	
	(a) Compressor	(a) Inspect the system. If it is found normal, add more capacity.
	(b) Condenser	(b) Inspect the system. If it is found normal, add more capacity.
	Increased load	If it is only a temporary increase, continue the operation. If it continues, add more capacity.
	Insufficient thermal insulation or degradation	Review, reconstruct, and/or repair
	Abnormally high pressure	Reduce the discharge pressure (increase flow of cooling water, add condenser, clean condenser, air vent, etc.)
	Gas leakage	Inspection and repair
Suction pressure is low (with no frost on the suction pipe, and it easily causes liquid flow-back)	Overheated run (excessive closure of the expansion valve)	Adjust (open) the expansion valve.
	Insufficient length of the cooling pipe.	Add capacity.
	Excessive frost on the cooling tube.	Remove frost.
	Lubricating oil is contained in the cooling pipe.	Discharge the oil.
	Aperture of the suction line	Rework on the pipe system
Discharge pressure is high	Insufficient cooling water or increased water temperature	Increase the water flow
	Insufficient capacity of the condenser	Add capacity.
	Contamination on the cooling surface of condenser	Cleaning
Discharge pressure is high (the bottom of the condenser is cold, the receiver is full)	Overcharging of the refrigerant	Discharge the refrigerant to a proper level.
	Clogging in the discharge line pipe	Rework on the pipe system
Excessive oil loss (increased discharge temperature)	Piston ring wear	Replacement
	Galling	Inspection and repair
	Gas leakage	Inspection and repair

Chapter 7 Related Documents

7.1 Development Views

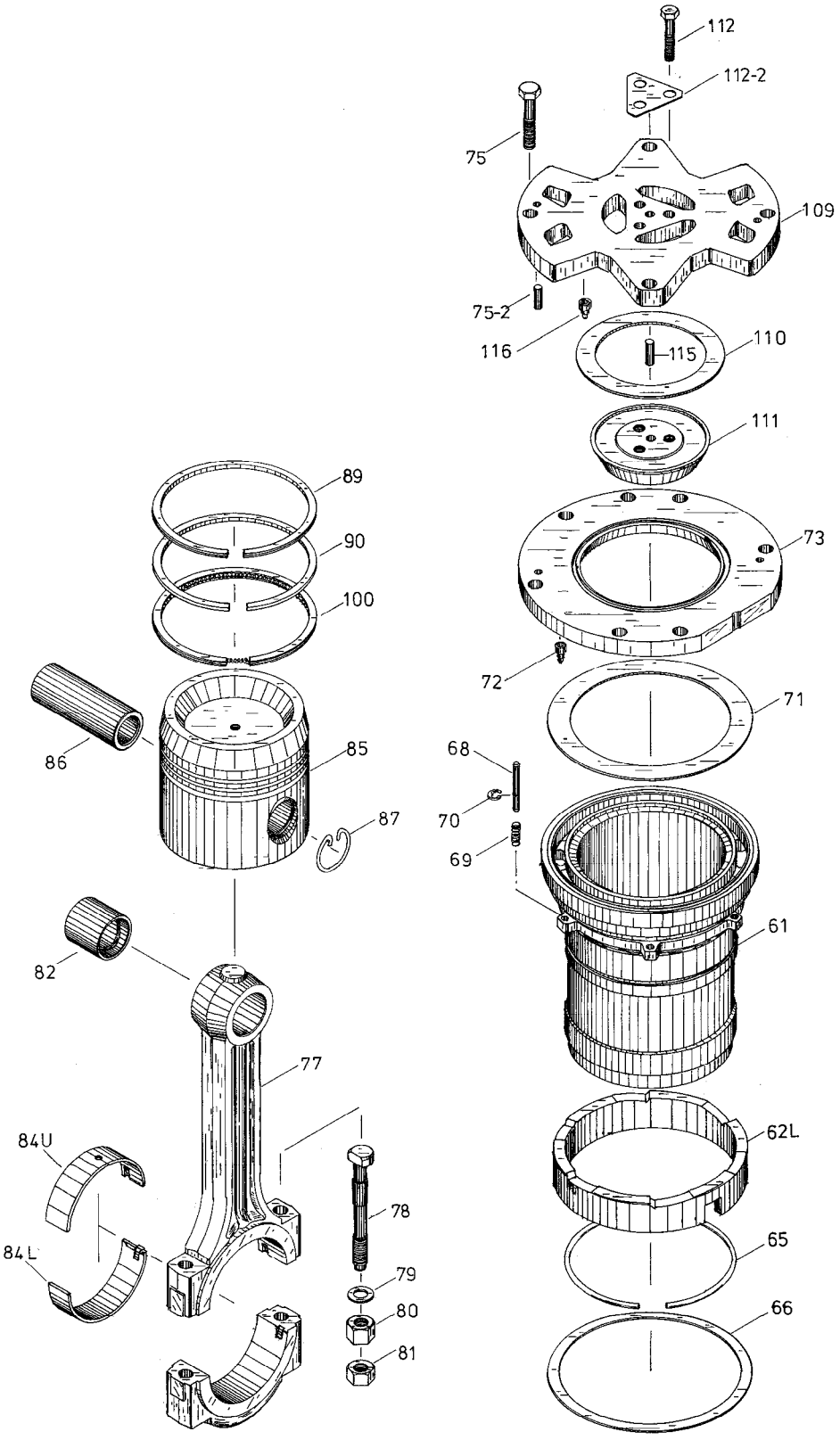

Figure 7-1 Exploded View around the Cylinder

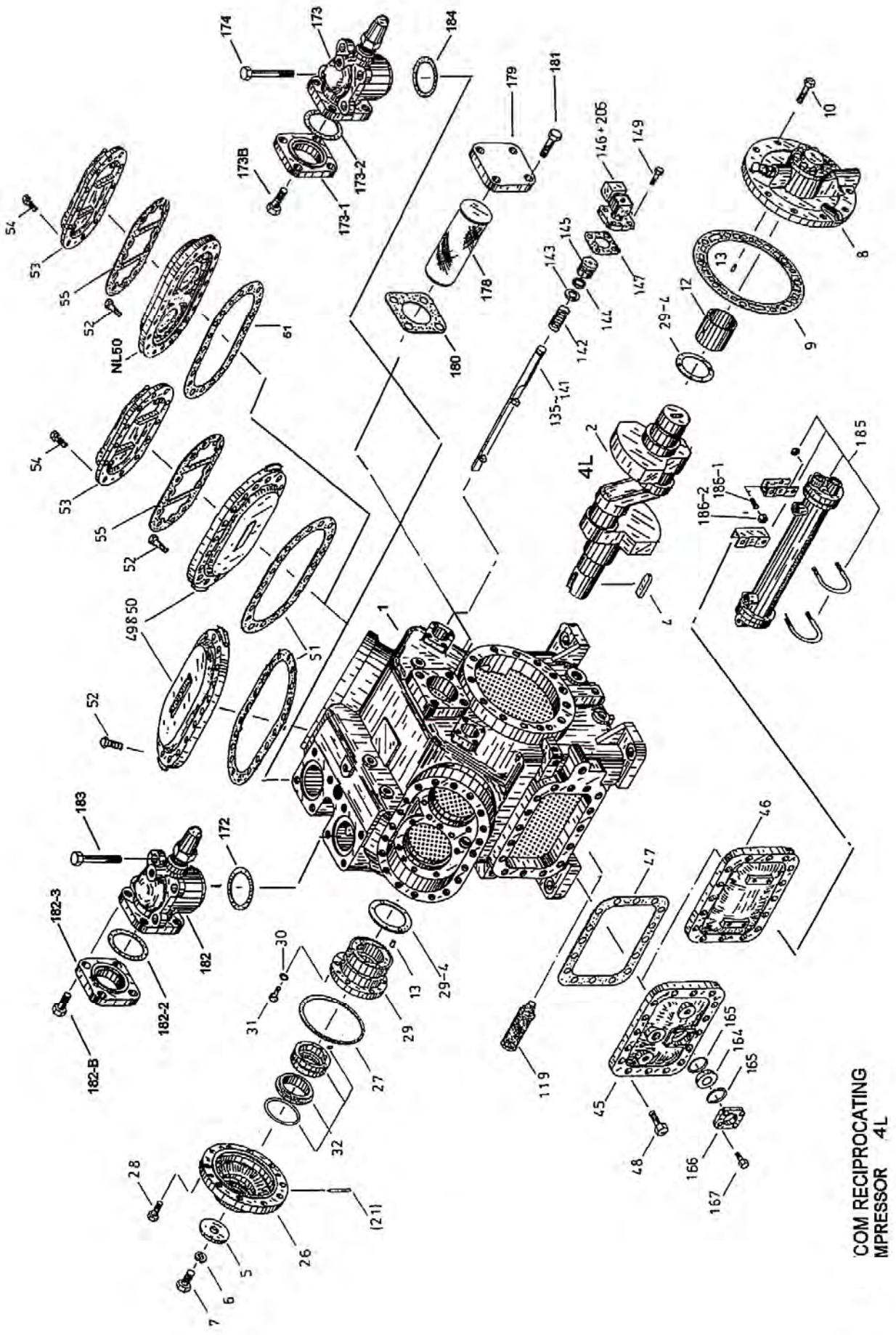

Figure 7-2 Exploded View around the Case 4L

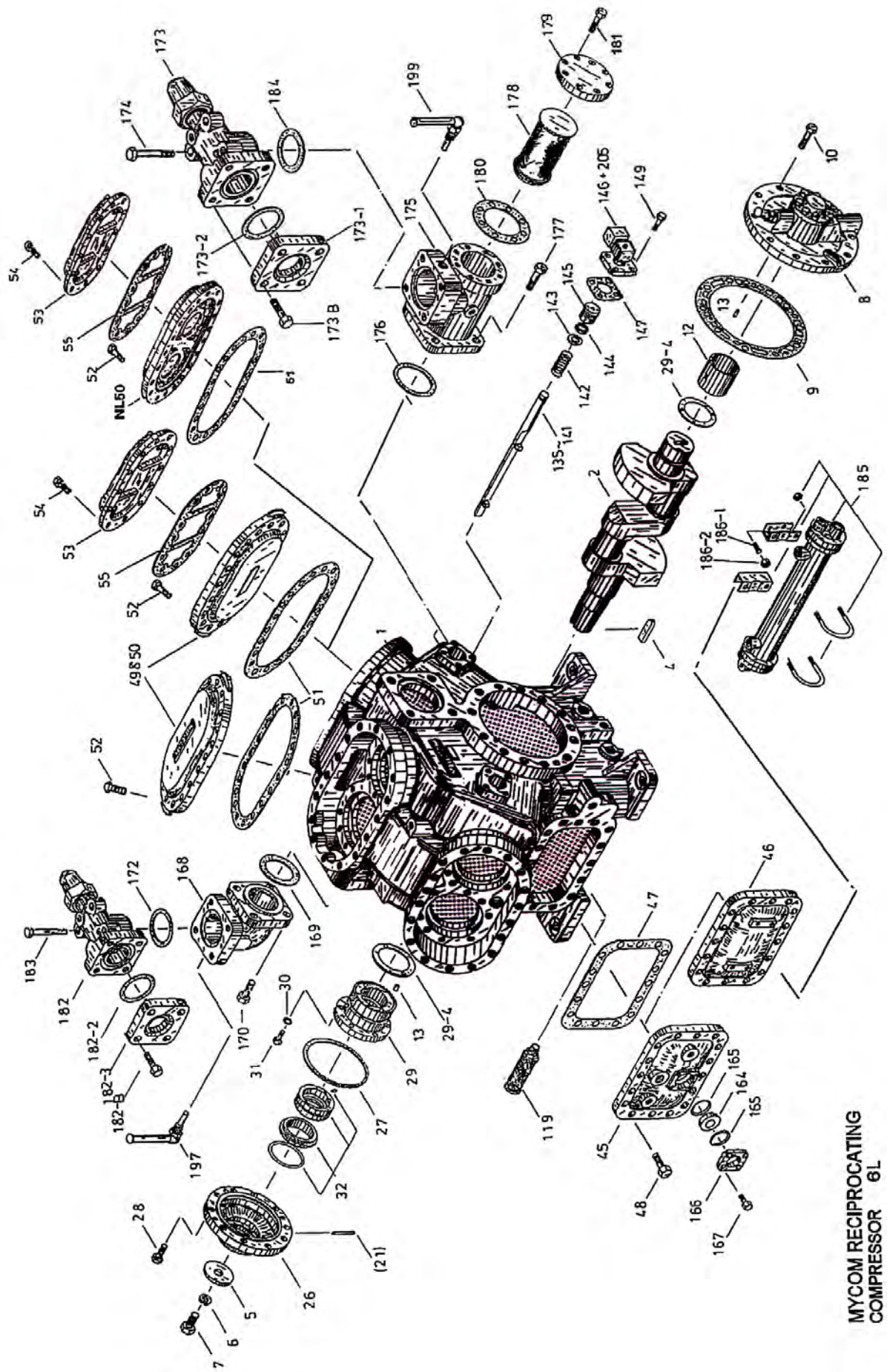

Figure 7-3 Exploded View around the Case 6L

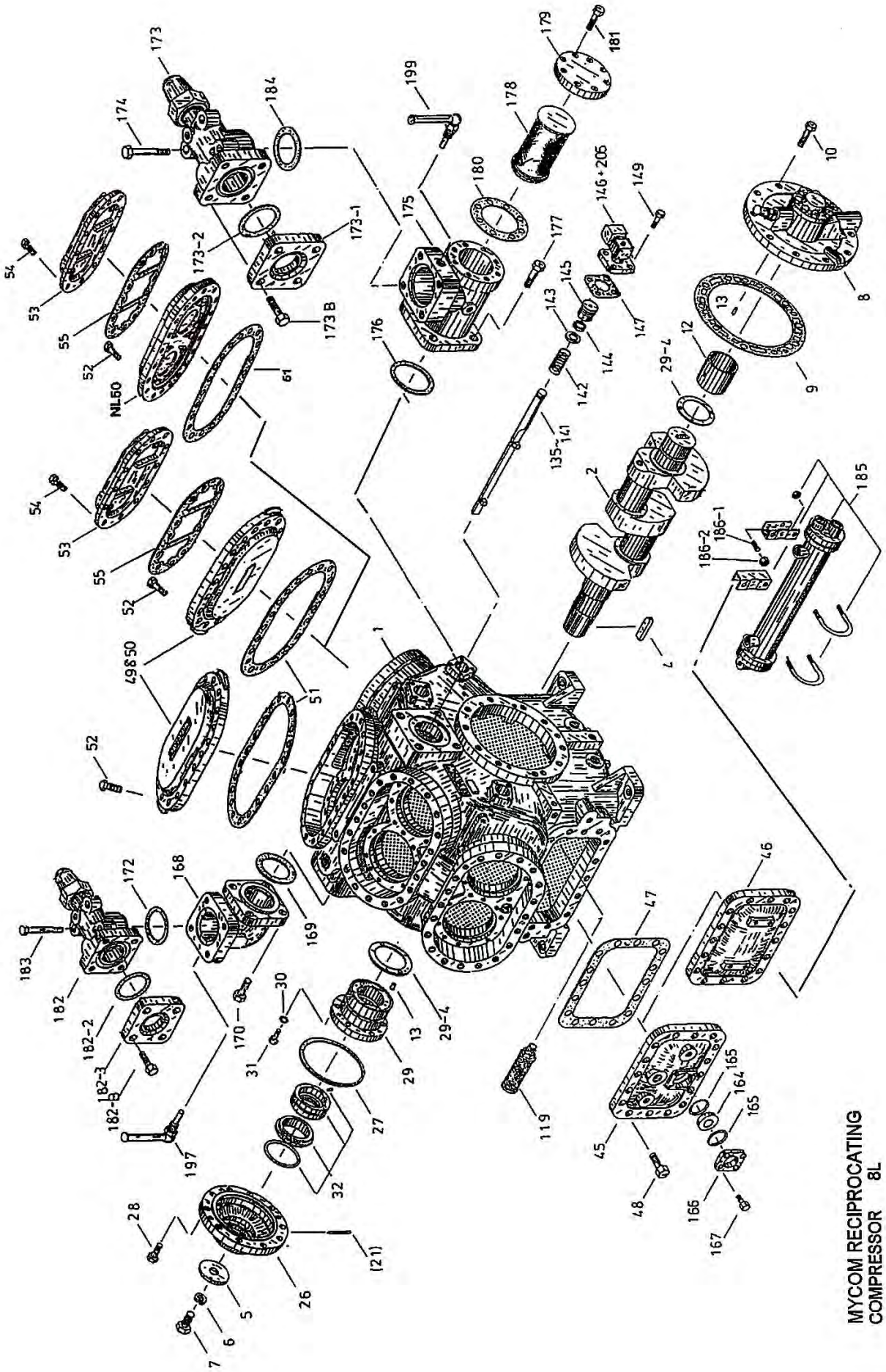

Figure 7-4 Exploded View around the Case 8L

7.2 Parts Configuration Table

Table 7-1 Parts Configuration

P/N	Item Name	Item Code	Remarks	Q'ty		
				4L	6L	8L
1	Crankcase	CR00100-L04	4L, mm scale	1	-	-
1	Crankcase	CR00100-L06	6L, mm scale	-	1	-
1	Crankcase	CR00100-L08	8L, mm scale	-	-	1
2	Crankshaft Assembly (AL)	CR00209-ALL04	4L	1	-	-
2	Crankshaft Assembly (AL)	CR00209-ALL06	6L	-	1	-
2	Crankshaft Assembly (AL)	CR00219-ALL08	8L	-	-	1
3	Drive Pin, Retainer (Spring Pin)	NE3203-008	Φ3 × 8 W type	1	1	1
4	Pulley Key	CR00400-L	20 × 12 × 90 (rounded at one end)	1	1	1
5	Flat Washer, Pulley	CR00500-BL	BΦ90	1	1	1
6	Lock Washer, Pulley	CR00600-AB	AB M27	1	1	1
7	Set Bolt, Pulley	CR00700-AB	AB M27 × 1.5 × 50	1	1	1
8	Bearing Housing	CR00800-L	L: oil pump integrated type	1	1	1
-	Bearing Housing Assembly with Gasket	CR0089-ZL	w/ gasket	-	-	-
9	Gasket, Bearing Housing	CR00900-L	Lt = 0.5	1	1	1
10	Tightening Bolt, Bearing Housing	NB15512-045	M12 × 45	10	10	10
12	Main Bushing	CR01200-L	L	1	1	1
13	Fixing Pin, Thrust Washer	NE3204-008	Φ4 × L8, one side chamfered	4	4	4
26	Cover, Shaft Seal	CR77100-MML	L	1	1	1
27	Gasket, Shaft Seal Cover	CR77200-L	Lt = 0.5	1	1	1
28	Fastening Bolt, Shaft Seal Cover	NB15510-035	M10 × 35	10	10	10
29	Thrust Bearing	CR02900-L	L	1	1	1
29-4	Thrust Washer	CR02900-L1	F100 Common to the main thrust	2	2	2
30	Washer, Thrust Bearing Fastening Bolt	CR03000-AB	Common to the type A, for M10	6	6	6
31	Fastening Bolt, Thrust Bearing	NBS14010-30	Small Hexagonal Bolt M10 × 30	6	6	6
32	Mechanical Seal Assembly	CR03200-LH	L (HNBR)	1	1	1
45	Cover, Hand Hole (with Window), with Gasket	CR0459-L01	L: w/ gasket	1	1	1
46	Cover, Hand Hole (without Window), with Gasket	CR0459-L03	L: w/ gasket	1	1	1
47	Gasket, Hand Hole Cover	CR04700-L	L t = 0.5	2	2	2
48	Fastening Bolt, Hand Hole Cover	NB15512-040	M12 × 40	32	32	32
49	Head Cover	CR0499-L	Compatible with water-cooled and air-cooled L models	2	3	4
51	Gasket, Head Cover	CR05100-L	L t = 0.5	2	3	4
52	Fastening Bolt, Head Cover	NB15512-040	M12 × 40	40	60	80
53	Cover, Head Jacket	CR83202-MMWL1	L1 (MM)	2	3	4

P/N	Item Name	Item Code	Remarks	Q'ty		
				4L	6L	8L
54	Fastening Bolt, Head Jacket Cover	NB17010-025	SUS M10 × 25	24	36	48
55	Gasket, Head Jacket Cover	CR05500-L	L t = 0.5	2	3	4
61	Cylinder Sleeve with Gasket	CR0619-L	L: w/ gasket	4	6	8
-	Cylinder Sleeve Assembly with Gasket	CR06100-ZLL	L: w/ left gasket	4	6	8
61-1	Alignment Pin, Cylinder Sleeve	NE3203-008	Φ3 × 8	4	6	8
62	Cam Ring (left down)	CR06200-LL	L	4	4	6
65	Retaining Ring	CR06500-L	L	4	6	8
66	Gasket, Cylinder Sleeve	CR06600-L	L	4	6	8
68	Lift Pin	CR06800-L	L	24	24	36
-	Lift Pin Set	CR0689-L8	L: 6 pins/set	4	4	6
69	Spring, Lift Pin	CR06900-A	A	24	-	-
69	Spring, Lift Pin	CR06900-B	B	24	24	36
-	Lift Pin Set	CR0689-L8	L: 6 pins/set	4	4	6
70	Stop Ring (E-ring), Lift Pin	NG13-E4	E4	24	24	36
71	Suction Plate Valve	CR07100-L	L	4	6	8
72	Spring, Suction Valve	CR11600-AB4	For Freon IV type	24	36	48
72	Spring, Suction Valve	CR11600-C	For cone-shaped NH_3 type	20	30	40
-	Spring Set, Suction Valve	CR0729-LNZ2	For Freon: 4 pcs/set	4	6	8
-	Spring Set, Suction Valve	CR0729-LF13	For R134a: 5 pcs/set	4	6	8
-	Spring Set, Suction Valve	CR0729-NL	For NH_3: 5 pcs/set	4	6	8
73	Valve Plate L/R	CR07300-FL	For Freon type	4	6	8
73	Valve Plate L/NH_3	CR07300-NL	For NH_3 type	4	6	8
73-1	Fastening Bolt, Valve Plate	NB15510-030P1	M10 × 30	14	21	28
73-2	Washer, Valve Plate Fastening Bolt		M10 (small, round)	14	21	28
75	Fastening Bolt, Discharge Valve Cage	NB14010-045	M10 × 1.0 × 45	16	24	32
75-2	Alignment Pin (Parallel Pin), Discharge Valve Cage	NE2006-018	Φ6 × 18	16	24	32
77	Connecting Rod Assembly	CR07600-LM	L	4	6	8
78	Fastening Bolt, Connecting Rod	CR07800-L	L M10	8	12	16
-	Fastening Bolt Set, Connecting Rod	CR0789-L	L	8	12	16
79	Washer, Connecting Rod		M10 (small, round)	8	12	16
80	Fastening Nut (1st), Rod		L M10	8	12	16
81	Fastening Nut (2nd), Rod		L M10	8	12	16
82	Roll Bushing, Rod	CR08200-L	L	4	6	8
82	Roll Bushing, Rod	CR08200-LF	L LP8-2F	4	6	8
84U	Bearing Halves (Top)	CR08400-LU	L MAE-CR-U	4	6	8
84L	Bearing Halves (Bottom)	CR08400-LL	L MAE-CR-L	4	6	8
-	Bearing Halves (Top and Bottom)	CR0849-L	L	4	6	8
85	Piston	CR08500-ALLMH	AL L	4	6	8
86	Piston Pin	CR08600-L	LΦ34 × 99	4	6	8
87	Lock Spring, Piston Pin	CR08700-L		8	12	16

P/N	Item Name	Item Code	Remarks	Q'ty		
				4L	6L	8L
-	Lock Spring Set, Piston Pin	CR0879-L	L: 2 pcs/set	4	6	8
89	Piston Ring	CR08900-LFCBFG1	1st (L, FC-PC-BFG1)	4	6	8
90	Piston Ring	CR08900-LFCT	2nd (L, FC-T)	4	6	8
100	Oil Control Ring	CR08900-LFCBC3	3rd (L, FC-PC-BC3)	4	6	8
-	Piston Ring Set	CR0899-L	L	4	6	8
-	Discharge Valve Assembly, L (HS)	CR10800-LHS	For HS specification	4	6	8
-	Discharge Valve Assembly, L/NH_3	CR10800-LN	For NH_3	4	6	8
109	Discharge Valve Cage, L/R	CR10900-LR	For Freon	4	6	8
109	Discharge Valve Cage, LN	CR10900-LN	For NH_3	4	6	8
110	Discharge Plate Valve	CR11000-L	L	4	6	8
111	Discharge Valve Seat	CR11100-L	L	4	6	8
112	Fastening Bolt, Discharge Valve Cage	NB15508-030	M8 × 30	12	18	24
112-2	Turn Stopper, Hexagonal Head Bolt for Valve Seat	CR112-2-L	L: t = 0.8	4	6	8
115	Alignment Pin (Parallel Pin), Discharge Valve Seat	NE2006-018	Φ6 × 18	4	6	8
116	Spring, Discharge Valve	CR11600-AB4	For Freon IV type	32	48	64
116	Spring, Discharge Valve	CR11600-C	For cone-shaped NH_3 type	24	36	48
-	Spring Set, Discharge Valve	CR1169-LNZ2	For Freon: 8 pcs/set	4	6	8
-	Spring Set, Discharge Valve	CR1169-LF13	For R134a: 12 pcs/set	4	6	8
-	Spring Set, Discharge Valve	CR1169-NL	For NH_3: 6 pcs/set	4	6	8
118	Hexagonal Nipple (R1/2)	NF01-04	PT15A	1	1	1
119	Oil Filter	CR71600-C	C (square type) #200	1	1	1
135	Push Rod, Unloader (1)	CR13500-L081	L = 371	1	1	1
136	Push Rod, Unloader (2)	CR13500-L082	L = 401	1	1	1
137	Push Rod, Unloader (3)	CR13500-L083	L = 431	-	-	1
142	Spring, Unloader Device	CR14200-A	A	2	2	3
143	Washer, Unloader Push Rod	CR14300-C	C 32 × 20 × 3	2	2	3
144	Stop Ring, Unloader Push Rod	NG12-020	For S20 shaft	2	2	3
145	Unloader Piston	CR14500-C	C	2	2	3
146+205	Cover, Unloader Piston (Solenoid Valve Integrated)	CR14600-K	K	2	2	3
147	Gasket, Unloader Cover	CR14700-K	K	2	2	3
149	Fastening Bolt, Unloader Piston Cover	NB15508-035	M8 × 35	8	8	12
164	Glass, Oil Sight	CR16400-AB	70D A/B	1	1	1
165	O-ring, Oil Sight Glass, JW1516 P35	PA61-035	AS568A-332 NBR	2	2	2
166	Gland, Oil Sight	CR16600-AB	70D 3/8	1	1	1
167	Fastening Bolt, Oil Sight Gland	NB15510-030	M10 × 30	4	4	4
168	Elbow, Discharge	CR16800-L100	8L 100A	-	1	1
169	Gasket, Discharge Elbow	CR72000-080N	MYK 80A	-	1	-
169	Gasket, Discharge Elbow	CR72000-090N	MYK 90A	-	-	1
170	Fastening Bolt, Discharge Elbow	NB15520-050	SCM435 M20 × 50	-	4	4

P/N	Item Name	Item Code	Remarks	Q'ty		
				4L	6L	8L
170-1	Washer, Discharge Elbow Fastening Bolt	ND422-20	M20	-	4	4
172	Gasket, Discharge Service Valve and Elbow	CR73900-K080	K 80A	-	1	-
172	Gasket, Discharge Service Valve and Elbow	CR73900-K100	K 100A	-	-	1
173	Service Valve, Suction	CR73120-080	SRV. 80A	1	-	-
173	Service Valve, Suction	CR73120-100	SRV. 100A	-	1	1
173-1	Companion Flange, Suction Service Valve	CR73800-K080	K 80A	1	-	-
173-1	Companion Flange, Suction Service Valve	CR73800-K100	K 100A	-	1	1
173-2	Gasket, Companion Flange, Suction Service Valve	CR18200-K080	K 80A	1	-	-
173-2	Gasket, Companion Flange, Suction Service Valve	CR73800-K100	K 100A	-	1	1
173B	Fastening Bolt, Suction Service Valve and Companion Flange	NB15520-050	M20 × 50	4	4	4
174	Fastening Bolt, Suction Service Valve	NB15516-140	M16 × 140	4	-	-
174	Fastening Bolt, Suction Service Valve	NB15520-190	M20 × 190	-	4	4
175	Case, Suction Filter	CR76500-L08	8L 100A	-	1	1
176	Gasket, Suction Filter Case	CR72000-100N	MYK 100A, body side	-	1	1
177	Fastening Bolt, Suction Filter Case	NB15522-055	M22 × 55	-	4	4
177-1	Fastening Bolt, Suction Filter Case	ND422-22	M22, star washer	-	4	4
178	Suction Filter	CR76400-L4	4L 80A	1	-	-
178	Suction Filter	CR76400-L8	8L 100A	-	1	1
179	Suction Filter Cover	CR76700-L08	8L	-	1	1
179	Suction Filter Cover	CR17900-A068	Same as Scale Trap Cover type 6, 8A	1	-	-
180	Gasket, Suction Filter Cover	CR16200-BN	Same as Suction End Cover Gasket type B, Part No.162	-	1	1
180	Gasket, Suction Filter Cover	CR18000-A068N	Same as Scale Trap Cover Gasket type 6, 8A, Part No.180	1	-	-
181	Fastening Bolt, Suction Filter Cover	NB15512-040	M12 × 40	4	8	8
182	Service Valve, Discharge	CR73120-065	SRV. 65A	1	-	-
182	Service Valve, Discharge	CR73120-080	SRV. 80A	-	1	-
182	Service Valve, Discharge	CR73120-100	SRV. 100A	-	-	1
182-3	Companion Flange, Suction Service Valve	CR73800-K065	K 65A	1	-	-
182-3	Companion Flange, Suction Service Valve	CR73800-K080	K 80A	-	1	-
182-3	Companion Flange, Suction Service Valve	CR73800-K100	K 100A	-	-	1
182-2	Gasket, Companion Flange, Discharge Service Valve	CR18200-K065	K 65A	1	-	-
182-2	Gasket, Companion Flange, Discharge Service Valve	CR18200-K080	K 80A	-	1	-
182-2	Gasket, Companion Flange, Discharge Service Valve	CR18200-K100	K 100A	-	-	1

P/N	Item Name	Item Code	Remarks	Q'ty		
				4L	6L	8L
182B	Fastening Bolt, Companion Flange, Discharge Service Valve	NB15516-045	M16 × 45	4	-	-
182B	Fastening Bolt, Companion Flange, Discharge Service Valve	NB15520-050	M20 × 50	-	4	4
183	Mounting Bolt, Discharge Service Valve	NB15516-130	M16 × 130	4	-	-
183	Mounting Bolt, Discharge Service Valve	NB15516-140	M16 × 140	-	4	-
183	Mounting Bolt, Discharge Service Valve	NB15520-190	M20 × 190	-	-	4
184	Mounting Gasket, Suction Service Valve	CR73900-K080	K 80A	1	-	-
184	Mounting Gasket, Suction Service Valve	CR73900-K100	K 100A	-	1	1
185	Oil Cooler (water-cooled)	CR18500-TBW	T-TCF-0.25-0617P	1	1	1
-	Gasket, T-TCF Cover, A	CR18500-GA		1	1	1
-	Gasket, T-TCF Cover, B	CR18500-GB		1	1	1
186-1	Mounting Bolt, Water-cooled Oil Cooler	-	M8 × 35-45H (hexagonal socket)	4	4	4
186-2	Nut, Mounting Bolt, Oil Cooler (water-cooled)	-	M8	4	4	4
197	Thermometer and Case	LC1103314	L (R3/8) 0 + 200°C	1	1	1
199	Thermometer and Case	LC1103311	L (R3/8) −50 + 50°C	1	1	1
205	Solenoid Valve, Unloader	KF711-XWM2	SPOLAN XWM 240V	2	2	3
208	Eye Bolt	NB600-16	M16	-	2	2
208	Eye Bolt	NB600-20	M20	1	-	-
214	Safety Valve, Internal	CR21400-L8	B566LDN-250P	1	1	1
305	Gas Equalizer	CR80700-02	L	1	1	1
-	Packing, Gas Equalizer	CR80800-02	L	1	1	1
-	V-pulley	CR70700-L08	Type L 380D × C8	1	1	1
-	Gasket Set, N4L	CR7118-NL4		-	-	-
-	Gasket Set, N6L	CR7118-NL6		-	-	-
-	Gasket Set, N8L	CR7118-NL8		-	-	-
-	Gasket, Oval Flange	CR71900-1	HF20	-	-	-
-	Disassembly Tool Set	CR70400-L	L	-	-	-

7.3 Configuration of Plate Valves and Associated Parts

This section lists the configuration of various types of suction/discharge valves and associated parts according to the different types of refrigerant.

Table 7-2 Suction Plate Valve Components

Refrigerant	Item Name	Specification	Item Code	
			Single	Set
NH_3	Valve Plate	-	CR07300-NL	-
	Spring	Cone-shaped spring × 5	CR11600-C	CR0729-NL
	Plate Valve	-	CR07100-L	-
R22 R404A R507A	Valve Plate	NZ2	CR07300-FL	-
	Spring	Type IV × 4	CR11600-AB4	CR0729-LNZ2
	Plate Valve	-	CR07100-L	-
R134a	Valve Plate	F13	-	-
	Spring	Type IV × 5	CR11600-AB4	CR0729-LF13
	Plate Valve	-	CR07100-L	-

Table 7-3 Discharge Plate Valve Components

Refrigerant	Item Name	Specification	Item Code	
			Single	Set
NH_3	Discharge Valve Cage	-	CR10900-LN	CR10800-LN
	Spring	Cone-shaped spring × 6	CR11600-C	CR1169-NL
	Plate Valve	-	CR11000-L	-
R22 R404A R507A	Discharge Valve Cage	NZ2	CR10900-LR	-
	Spring	Type IV × 8	CR11600-AB4	CR1169-LNZ2
	Plate Valve	-	CR11000-L	-
R134a	Discharge Valve Cage	F13	-	-
	Spring	Type IV × 12	CR11600-AB4	CR11600-LF13
	Plate Valve	-	CR11000-L	-

Table 7-4 NH_3 Refrigerant for Suction and Discharge Plate Valves (HS specification)

Discharge/Suction	Item Name	Specification	Item Code	
			Single	Set
Suction	Valve Plate	-	CR07300-LHS	-
	Spring	Cone-shaped spring × 5	CR11600-C	CR0729-NL
	Plate Valve	-	CR07100-L	-
Discharge	DV Cage	NZ2	CR10900-LHS	CR10800-LHS
	Spring	Cone-shaped spring × 6	CR11600-C	CR1169-NL
	Plate Valve	-	CR11000-L	-

7.4 List of Tightening Torques for Bolts and Nuts

Table 7-5 Tightening Torques for Bolts and Nuts

No.	Item Name	Size	Tightening Torque	
			N·m	kg·cm
7	Pulley Set Bolt	M27 × 1.5 × 50	380	3800
10	Bearing Housing Tightening Bolt	M12 × 45	80	800
28	Shaft Seal Cover Fastening Bolt	M10 × 45	40	400
31	Thrust Bearing Fastening Bolt	M10 × 30 (small)	40	400
48	Hand Hole Cover Fastening Bolt	M12 × 40	80	800
52	Head Cover Fastening Bolt	M12 × 40	80	800
54	Head Jacket Cover Fastening Bolt	SUS M10 × 25	40	400
73-1	Valve Plate Fastening Bolt	M10 × 1.0 × 30 (small)	40	400
75	Discharge Valve Cage Fastening Bolt	M10 × 1.0 × 45 (small)	40	400
78	Connecting Rod Fastening Bolt	M10 × 109, special bolt	-	-
80	First Nut, Crank Pin Fastening	M10 (small)	60	600
81	Second Nut, Crank Pin Fastening	M10 (small)	40	400
112	Discharge Valve Seat Fastening Bolt	M8 × 30	30	300
112	Discharge Valve Seat Fastening Bolt	M8 × 40, for HS	30	300
149	Unloader Piston Cover Fastening Bolt	M8 × 35	40	400
167	Oil Sight Gland Fastening Bolt	M10 × 30 (small)	40	400
170	80A Discharge Elbow Fastening Bolt	M20 × 50	160	1600
177	100A Suction Filter Case Fastening Bolt	M22 × 55	300	3000
181	Suction Filter Cover Fastening Bolt	M12 × 40	80	800
182B	100A Companion Flange Fastening Bolt	M20 × 50	160	1600
182B	80A Companion Flange Fastening Bolt	M20 × 50	160	1600
182B	100A Discharge Elbow Fastening Bolt	M20 × 55	160	1600
182B	65A Service Valve Fastening Bolt	M16 × 140	120	1200
182B	65A Companion Flange Fastening Bolt	M16 × 45	120	1200
183	80A Service Valve Fastening Bolt	M16 × 140	120	1200
183	100A Service Valve Fastening Bolt	M20 × 190	160	1600
186-1	Direct Expansion Oil Cooler Mounting Bolt/Nut (186-2)	M12 × 25/M12	80	800
186-1	Water-cooled Oil Cooler Mounting Bolt/Nut (186-2)	M8 × 35/M8	30	300
236	Oval Flange for Water Cooled Head Cover Fastening Bolt	SUS M10 × 25	40	400
-	Discharge Valve Cage Guide Fastening Bolt	M10 × 1.0 × 45 (small), for HS	40	400

7.5 Criteria for Replacement of Parts

7.5.1 Filters and the Like

When cleaning the wire mesh, check for any broken mesh or separation of soldered parts.
If any defect is found, be sure to repair it or replace it with a new one.

【NOTE】

- Soldering of stainless steel parts requires the use of a special flux.

• If any foreign matter is caught in the fine mesh and cannot be removed, apply compressed air from the downstream side against the liquid flow to blow it out.

• The oil strainer is a corrugated cylindrical filter with a wide passage area.
If any clogging is found, use compressed air to blow it out from the inside of the filter element.

7.5.2 Crankshaft

CAUTION

- Padding of the crankshaft cannot be made due to the nature of the material. Any padding (ex.: by welding or plating) can cause the crankshaft to break.

a) Check that each bearing point of the crankshaft is not excessively worn. A significant wear will develop a step between the sliding part and the non-sliding part of the bearing. Check for any step visually or by touching the surface.

b) Use a micrometer to measure the shaft diameter at various worn points of the bearings. If the measured diameter is less than the limit shown in the table below, replace the crankshaft.

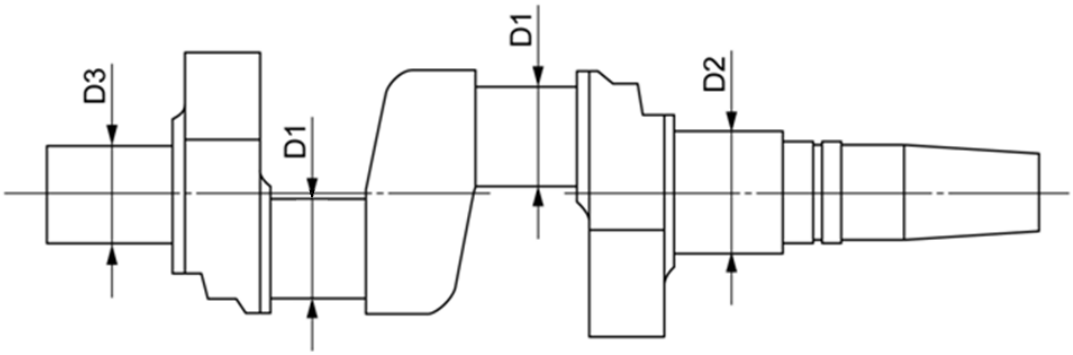

Figure 7-5 Crankshaft Diameter Measurement Point

(mm)

Measurement Point		L-series	
		Nominal Dimension	Use Limit
Crank pin part	D1	82.0	81.83
Thrust bearing part	D2	85.0	84.86
Main bearing part	D3	85.0	84.86

c) Check that there is no flaw on each sliding surface of the crankshaft. If any flaw is found, use a piece of sand paper (#800 or finer) or grind stone to correct the flaw.

d) Remove all plugs attached to the crankshaft and clean the oil holes. After they have been cleaned, check that oil can flow through the holes. Attach each plug as soon as the check is done. Missing to attach any plug can result in a seizure accident due to insufficient oil pressure.

e) Check that the shaft seal attachment part of the crankshaft is free from any flaw. If any flaw is found, use a piece of sand paper (#800 or finer) or fine oilstone to correct the flaw.

7.5.3 Connecting Rod Bearing Halves

■ Roll bushing

If the gap between the shaft hole at the small end of the connecting rod and the piston pin exceeds the service limit, replace them.

(mm)

Measurement Point	Nominal Dimension	Use Limit
Gap between the piston pin and the connecting rod small end	0.025–0.071	0.20

■ Bearing halves

a) Check the sliding surface of the large end bearing halves. If any foreign matter is found, replace the bearing halves. If the crankshaft is worn, be particularly careful to inspect the metal surface.

b) Also be careful about the tension of the bearing halves. The internal radius of the bearing halves is larger than the internal radius of the large end of the connecting rod, when they are manufactured. As it is designed to make a perfect circle only after the top and bottom halves are combined together and tightened, the measurement between the ends of disassembled bearing halves should become longer due to the tension. If this tension is not present, replace the bearing halves even if they are not worn.

c) If the gap between the crank pin and bearing halves exceeds the use limit, replace them.

(mm)

Measurement Point	Nominal Dimension	Use Limit
Gap between the crank pin and bearing halves	0.05–0.12	0.27

7.5.4 Piston, Piston Pin, and Piston Ring

a) Check the piston for flaws mainly on the outer surface. If any flaw is present, correct it using a grindstone.
The direction of grinding shall be perpendicular to the sliding direction.
Measure the outer diameter of the piston skirt.
If the measured diameter is less than the use limit, replace the piston.

(mm)

Measurement Point	Nominal Dimension	Use Limit
Outer diameter at D	115.0	114.78

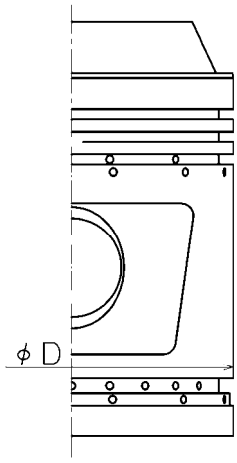

Figure 7-6 Piston Diameter Measurement Point

b) Measure the outer diameter of the piston pin at three places.
If any of the measured outer diameter is less than the use limit, replace the piston pin.

(mm)

Measurement Point	Nominal Dimension	Use Limit
Outer diameter	34.0	33.9

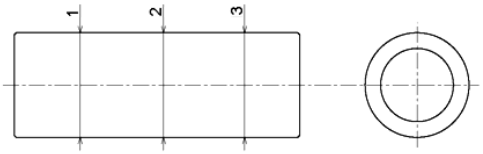

Figure 7-7 Piston Pin Diameter Measurement Point

c) The gap between the piston pin hole and the piston pin is variable. Measure the gap and if it exceeds the service limit, replace either piston or piston pin, whichever presenting a severer wear.

(mm)

Measurement Point	**Nominal Dimension**	**Use Limit**
Gap between the piston pin and the hole	0.009–0.036	0.15

d) For piston rings, besides checking the condition of the outer sliding surface including any flaw or abnormal wear, check the normal wear at the same time.
To check the condition of wear, measure the gap between both ends of the piston ring.
For this, place the piston ring at the distance of 3 mm from the top of the cylinder sleeve and measure the gap. If the measured gap exceeds the use limit, replace the piston ring.

(mm)

Measurement Point	**Nominal Dimension**	**Use Limit**
Piston Rings 1st, 2nd and 3rd Gap between both ends	0.45–0.65	2.3

【NOTE】

- The piston rings must be replaced at the recommended intervals even though the wear does not exceed the use limit yet.

e) If any burr (circular ridge) is formed on the top and bottom of the sliding surface of the piston ring, use a grind stone or other tool to chamfer the edges before using it.
Depending on the use condition, the piston ring grooves may also be worn out. When the wear exceeds the use limit, it may cause oil loss, and thus replace the piston.

(mm)

Measurement Point	**Nominal Dimension**	**Use Limit**
Gap between the groove wall and the piston ring	0.02–0.06	0.15

7.5.5 Cylinder Sleeve

a) Inspect the upper surface of the suction valve seat. If any flaw is found, correct the flaw by polishing or grinding.

b) Measure the height of the seat part. If it exceeds the use limit, replace the cylinder sleeve.

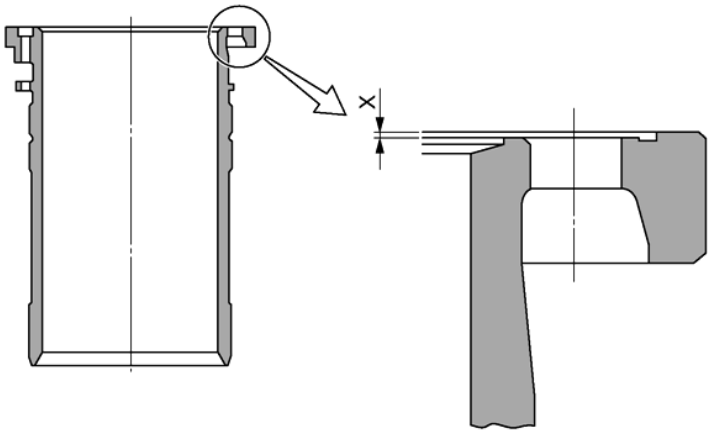

Figure 7-8 Seat Surface Height Measurement Point

(mm)

Measurement Point	Use Limit	
	Nominal Dimension	Use Limit
X in the above figure	0.5	0.2

c) If the inside surface of the cylinder sleeve has any flaw, use fine GC grinding stone or fine sandpaper to correct the defect.

d) The part 10 to 20 mm from the top end of the cylinder sleeve is most likely to be worn.
If the inner wall of the cylinder exceeds the use limit, replace it.

(mm)

Measurement Point	Nominal Dimension	Use Limit
Internal diameter of cylinder sleeve	115.0	115.25

e) Measure the gap between the cylinder inner wall and the piston skirt. If the gap exceeds the use limit, replace the piston.

(mm)

Measurement Point	Nominal Dimension	Use Limit
Gap between the cylinder inner wall and the piston skirt	0.19–0.292	0.4

【NOTE】

- When you see the inside surface of the cylinder by reflecting light, it will look like a rainbow when the condition is good.

7.5.6 Discharge Valve Assembly and Suction Valve Assembly

The discharge plate valve, suction plate valve, and valve springs must be regularly replaced.
While the service life depends on the conditions of use, refer to Chapter 5, Sections 5.2.3.2 and 5.2.3.3 in this manual for the typical replacement intervals.

a) Measure the thickness of the seat part (M). If the wear on the seat part exceeds 0.15 mm, the valve needs to be replaced even if it has not reached the typical replacement period.

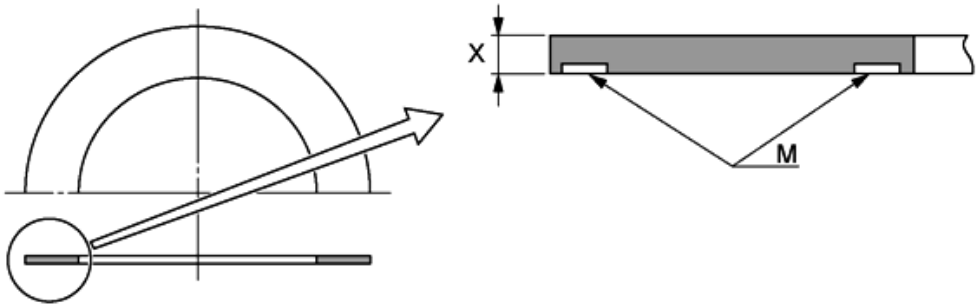

Figure 7-9 Seat Thickness Measurement Point

(mm)

Measurement Point	Nominal Dimension	Use Limit
X in the above figure	1.4	1.25

b) Even if the seat part is not excessively worn, replace the valve if the spring mating surface is unevenly worn or distorted. If any flaw exists, it should be replaced as it may develop a crack due to cyclic fatigue.

c) For the inspection of springs, if any broken spring is found, also check the bottom of the spring hole of the valve plate and cage. A broken spring can hit the bottom of the hole and deepen it.
The standard free length of the discharge valve spring and suction valve spring is 10 mm.
Replace any of the springs when its free length becomes 9 mm or less, even before the standard replacement time comes.

d) Measure the seat height of the valve plate and discharge valve seat.
If the seat height becomes less than 0.2 mm, replace the valve plate and discharge valve seat.

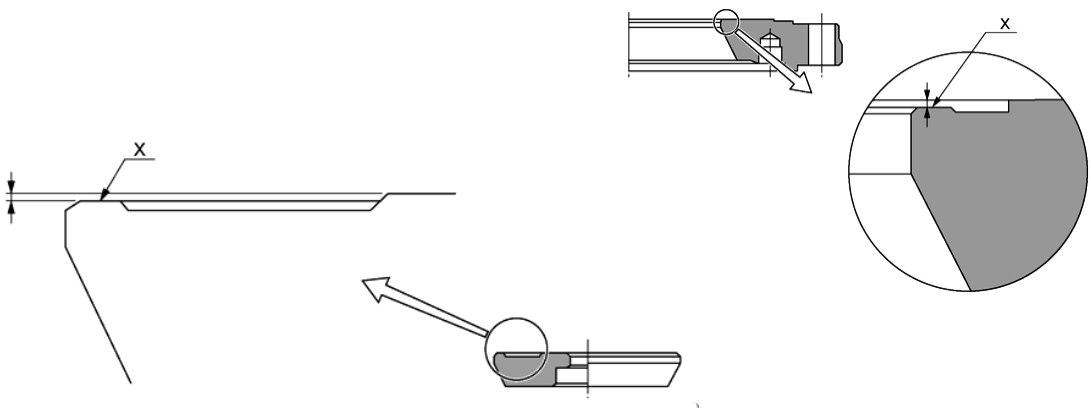

Figure 7-10 Seat Height Measurement Point

7.5.7 Main Bushing and Thrust Washer

a) If the gap between the main bushing and the crankshaft exceeds the use limit, replace them.
If the inner wall of the main bushing is worn over the use limit, replace it.

b) When thickness of the thrust washer decreases below the use limit, replace it.

(mm)

Measurement Point	Nominal Dimension	Use Limit
Gap between the main bushing and the crankshaft	0.035–0.20	0.43
Inner diameter of the main bushing	85.0	85.20
Thickness of the thrust washer	2.70–2.77	2.55

7.5.8 Oil Pump

If the oil pressure is still low when the oil pressure control valve is closed during operation, and it is not due to the clogging of the oil filter, the gear, metal, and/or shaft of the oil pump may be worn.

Remove the oil pump from the compressor. Then, hold the pump shaft and check if there is any play in the axial and/or lateral direction. If any play is found, replace the bearing housing assembly.

7.5.9 Thrust Bearing

If the gap between the inner wall of thrust bearing and the crankshaft exceeds the use limit, replace them.
If the inner wall of the thrust bearing is worn over the use limit, replace it.

(mm)

Measurement Point	Nominal Dimension	Use Limit
Gap between the thrust bearing and the crankshaft	0.06–0.115	0.27
Inner diameter of the thrust bearing	85.0	85.20

7.5.10 Shaft Seal

Inspect the sliding surface of the stationary ring and rotating ring.

Although the shaft seal assembly is to be replaced after any abnormality is found by the inspection, because only visually checking the sliding surface may be insufficient in determining any abnormality, it is recommended to replace the seal assembly with a new one, as in the case of O-rings, in such a case.

The O-rings must always be replaced with new ones.

7.5.11 Bolts and Other Hardware

The crank pin fastening bolts and discharge valve fastening bolts must be carefully and thoroughly inspected.

In particular, these bolts must be very carefully checked after any oil hammering, liquid hammering, or seizure accident.

If any defect is found on the thread, be sure to replace it.

7.5.12 Gaskets and O-rings

All gaskets and O-rings must be replaced with new ones whenever disassembly and inspection is performed.

While O-rings are made of synthetic rubbers, the most suitable material may differ according to refrigerants and lubricants to be used, and actual operational conditions. For details, please contact our sales offices or service centers.

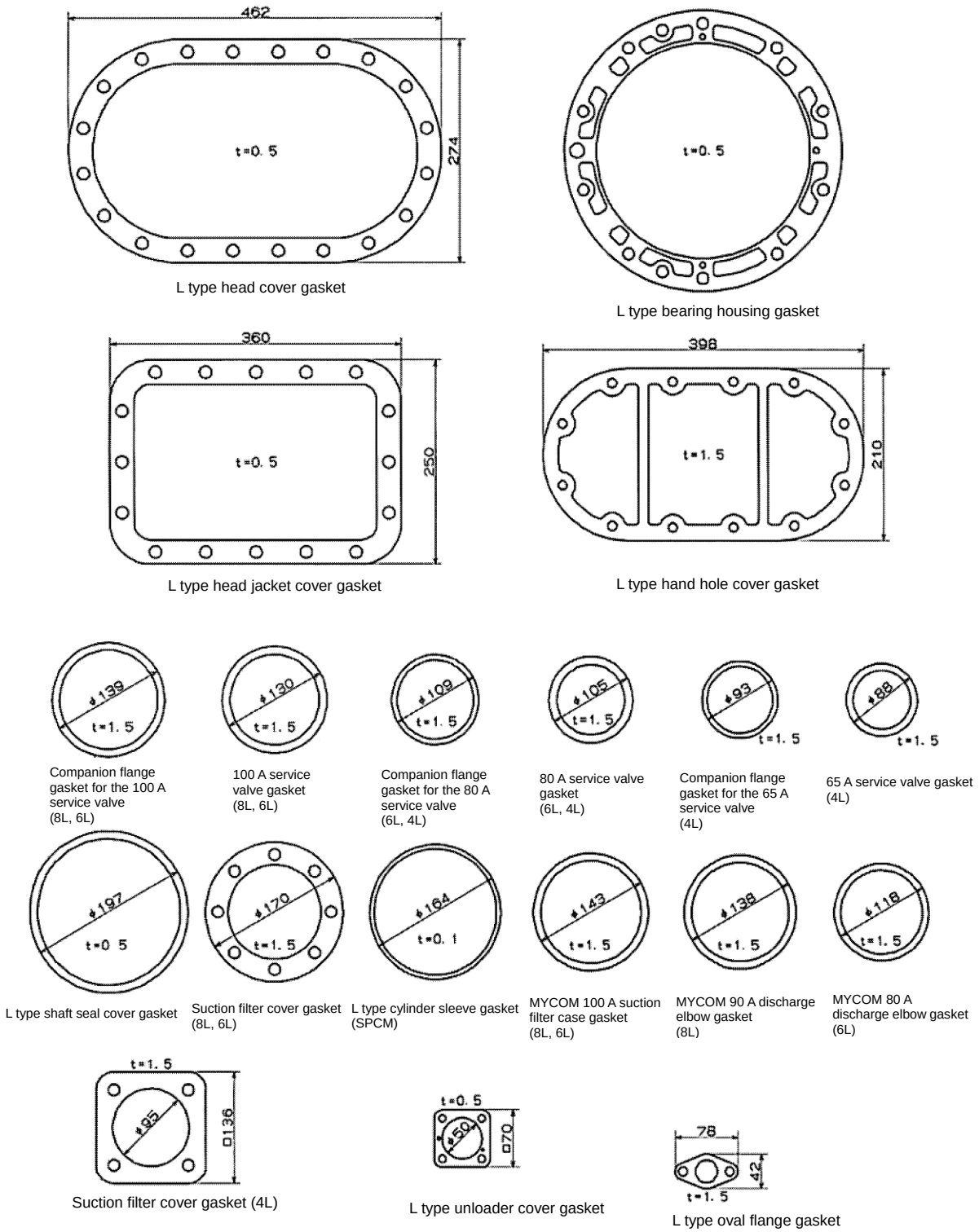

Figure 7-11 Gaskets

7.6 Standard Assembly Clearance

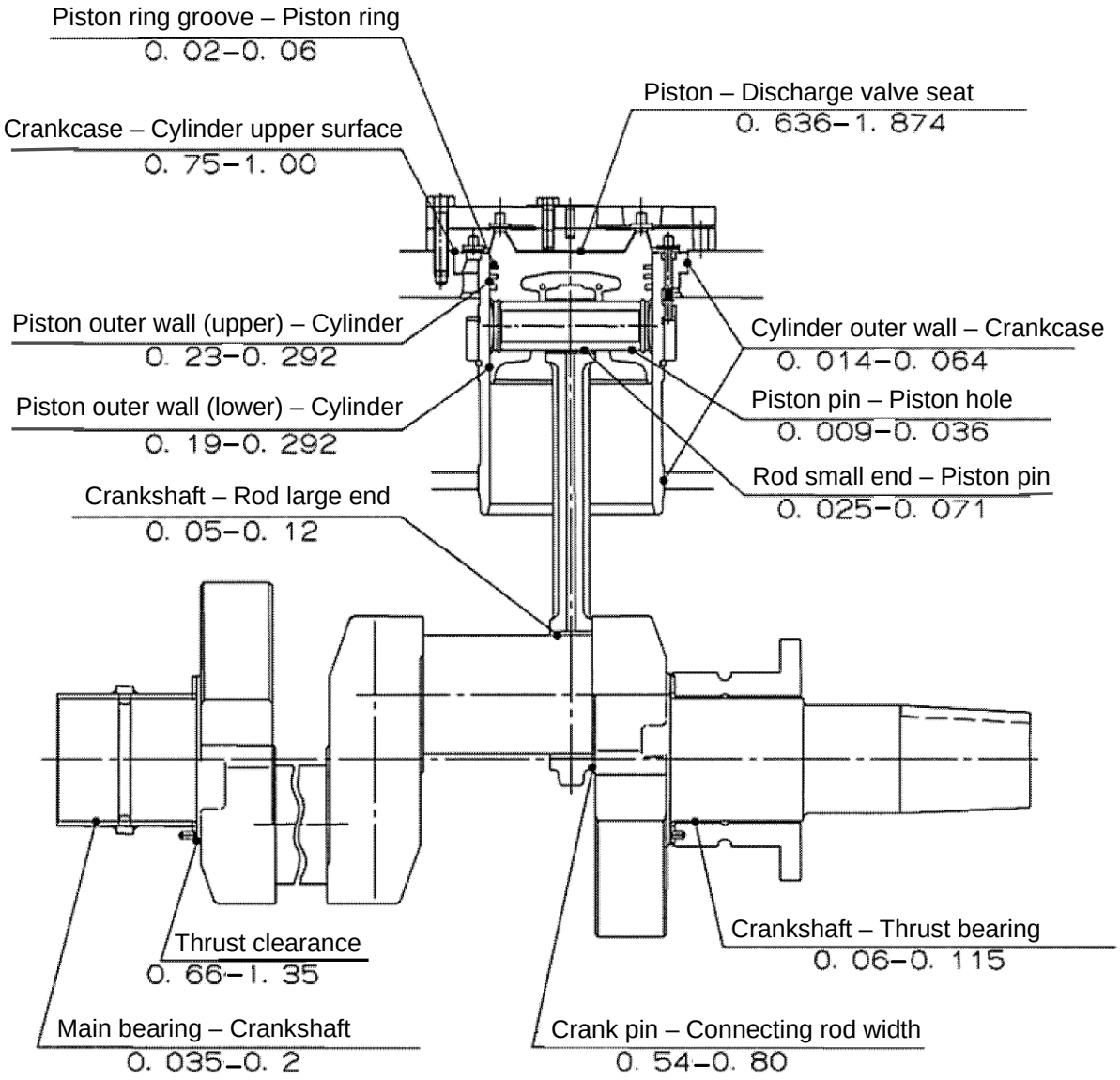

Figure 7-12 Standard Assembly Clearance (Unit: mm)

7.7 Vibration Criteria

■ Vibration criteria and their application

The vibration assessment criteria are used to evaluate the vibration level of the reciprocating compressor installed in the unit. Note that these criteria are applicable only when the pedestal, any pipe line, or other parts are not mechanically resonated when the compressor is running at the rated speed.

■ Measurement point

Compressor: Any point near the shaft bearing opposite to the loading side (at the oil pump) shall be used, for measuring the vibration in the three mutually perpendicular directions, i.e., vertical, horizontal and axial directions.

■ Vibration velocity criteria

- The vibration severity is defined by the rms (root-mean-square) value of the vibration velocity (mm/s rms).
- The class is determined by the rated power of the motor connected to the compressor.
- It is applicable to both the belt drive and direct drive systems.
- If the vibration severity is to be represented by the displacement (D: μm P-P), use the following conversion formula:

  $D = 30000 \times \sqrt{2} \div (\pi N) \bullet Vrms$

  (N: rotation speed in min^{-1}; Vrms: vibration severity represented by the vibration speed mm/s rms)
- If the vibration is in the region of A or B, there should be no particular problems.
- If it is in the region of C, the action to take shall be determined through discussion between the parties concerned.
- If it is in the region of D, immediately stop the operation and perform investigation.

Table 7-6 Vibration Velocity Criteria (mm/s rms)

A: Excellent, B: Good, C: Caution, D: Unacceptable

Vibration severity range		Motor rated power					
		Fixed base			Anti-vibration base		
Class	Vibration velocity rms (mm/s rms)	Less than 50 kW	50–100 kW	100 kW or higher	Less than 50 kW	50–100 kW	100 kW or higher
1.1	1.12	A/B	A/B	A/B	A/B	A/B	A/B
1.8	1.78						
2.8	2.82						
4.5	4.46						
7.1	7.07	C					
11	11.2		C		C		
18	17.8	D		C		C	
28	28.2		D		D		C
45	44.6			D		D	
71	70.7						D

7.8 Disassembly Tools

The following list shows the disassembling tools for the parts given in Table 7-1 "Parts Configuration " in this Chapter.

Table 7-7 Items Included in the Disassembly Tool Set

Name	Outline	Specification	Qty	Remarks
Socket Wrench Box		WAF 13 mm 14 mm long 17 mm 19 mm	1 1 1 1	
Nut spinner handle		300 mm, 12.7 square	1	
Double ended wrench		13–17 mm 10–14 mm	1 1	For gauge joints and water piping
Single Ended Wrench		23 mm	1	For oil filter
Screwdriver		100 mm, flat-bladed	1	For unloader solenoid valve
Pulley extractor	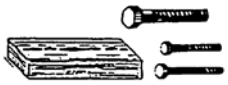	Bolts M20 × 100: 1 pcs M12 × 70: 2 pcs	1 set	
Eye Bolt		1/4"	1	For piston
Adjustable wrench		250 mm	1	
Extension bar		152 mm, 12.7	1	
Ratchet handle		1/4"	1	or JO valve
Stud bolt		M12 × 70	1	For head cover
Sponge		20 × 160 × 160 mm	1	For cleaning
Hose		Φ15 (I.D.), Φ20 (O.D.), 750 mm	1	For filling lubricating oil

Contact Information

Sales Offices/Service Centers

■ Sales Offices in Japan (as of February 01, 2015)

Description	Location	Phone/Fax
Head Office	3–14–15 BOTAN KOTO-KU, TOKYO 135-8482	TEL: 03-3642-8181 FAX: 03-3643-7094
Hokkaido Branch	2-5-1, 3-JYO NIJYUUYONKEN NISHI-KU, SAPPORO-CITY, HOKKAIDO 063-0803	TEL: 011-631-2052 FAX: 011-631-2053
Tohoku Branch	8-72, ROKUTYONO-MEMINAMI-MACHI, WAKABAYASHI-KU, SENDAI-CITY, MIYAGI 984-0013	TEL: 022-288-5001 FAX: 022-288-5155
Kanto Branch	3–14–15 BOTAN, KOTO-KU, TOKYO 135-8482	TEL: 03-3642-8968 FAX: 03-3641-8468
Chubu Branch	2-9-6, MARUNOUCHI, NAKA-KU, NAGOYA CITY, AICHI 460-0002	TEL: 052-218-3307 FAX: 052-218-3308
Kansai Branch	1-4-27, EBIE, FUKUSHIMA-KU, OSAKA CITY, OSAKA 553-0001	TEL: 06-4795-6000 FAX: 06-4795-6033
Chushikoku Branch	2-3-40, TAKAYADAI, HIGASHIHIROSHIMA CITY, HIROSHIMA 739-2117	TEL: 082-491-1830 FAX: 082-491-1838
Kyushu Branch	FUKUOKA-FUJILAND-BUILD. 10F, 2-3, NAKASHIMA-MACHI, NAKASU, HAKATA-KU, FUKUOKA CITY, FUKUOKA 810-0802	TEL: 092-262-0016 FAX: 092-262-0115

■ Manufacturing Bases in Japan (as of February 01, 2015)

Description	Location	Phone/Fax
Moriya Plant	2000, TATSUZAWA MORIYA-CITY, IBARAKI 302-0118	TEL: 0297-48-1361 FAX: 0297-48-5269
Higashi-Hiroshima Plant	2-3-40, TAKAYADAI, HIGASHIHIROSHIMA CITY, HIROSHIMA 739-2117	TEL: 082-491-1828 FAX: 082-491-1838

■ Global Network (as of February 01, 2015)

Description	Location	Telephone and facsimile No.
NORTH AMERICA		
MAYEKAWA CANADA INC. (VANCOUVER OFFICE)	12180 RIVERSIDE WAY, RICHMOND, B.C., V6W 1K5, CANADA	TEL: (1) 604-270-1544 FAX: (1) 604-270-9870
MAYEKAWA CANADA INC. (TORONTO OFFICE)	1745 BONHILL ROAD, UNIT #6&7 MISSISSAUGA, ONTARIO, L5T 1C1, CANADA	TEL: (1) 905-564-0664 FAX: (1) 905-564-7614
MAYEKAWA CANADA INC. (CALGARY OFFICE)	4525 6A STREET N.E., CALGARY, ALBERTA, T2E 4B2, CANADA	TEL: (1) 403-250-1554 FAX: (1) 403-250-1504
MAYEKAWA U.S.A. INC. (CHICAGO OFFICE)	1850 JARVICE AVENUE, ELK GROVE VILLAGE, IL 60007, U.S.A.	TEL: (1) 773-516-5070 FAX: (1) 773-516-5071
MAYEKAWA U.S.A. INC. (NEW YORK OFFICE)	250 WEST NYACK ROAD,SUITE 230,WEST NYACK, NY 10994, U.S.A.	TEL: (1) 914-301-9770 FAX: (1) 914-332-0400
MAYEKAWA U.S.A. INC. (HEAD QUARTERS) (NASHVILLE PLANT)	130 SMART PARK DRIVE, LEBANON, TN 37090, U.S.A.	TEL: (1) 615-773-2859 FAX: (1) 615-444-1995
MAYEKAWA U.S.A. INC. (LA OFFICE)	19475 GRAMERCY PLACE, TORRANCE, CA 90501, U.S.A.	TEL: (1) 310-328-1362 FAX: (1) 310-782-6759
MAYEKAWA U.S.A. INC. (SEATTLE OFFICE)	2615 W CASINO ROAD, UNIT-3D, EVERETT, WA 98204, U.S.A.	TEL: (1) 425-645-9400 FAX: (1) 425-353-3344
MAYEKAWA U.S.A. INC. (COVINA OFFICE)	1272 CENTER COURT DR, SUITE 106, COVINA, CA 91724, U.S.A.	TEL: (1) 626-598-5030 FAX: (1) -
MAYEKAWA U.S.A.INC. (SAN ANTONIO OFFICE)	1219 SAFARI, SAN ANTONIO, TX 78216, U.S.A.	TEL: (1) 210-599-4536 FAX: (1) 210-599-4538
MAYEKAWA U.S.A. INC. (YORK OFFICE)	3395 FARMTRAIL ROAD YORK, PA 17406, U.S.A.	TEL: (1) 717-779-0138 FAX: (1) 717-779-0109
MAYEKAWA U.S.A. INC. CHEMICAL PROCESS DIVISION (LA OFFICE & ANUFACTURING)	19475 GRAMERCY PLACE, TORRANCE, CA 90501, U.S.A.	TEL: (1) 310-328-6279 FAX: (1) 310-328-8487
MAYEKAWA U.S.A. INC. CHEMICAL PROCESS DIVISION (HUSTON SERVICE OFFICE)	3222 PASADENA FREEWAY PASADENA, TX 77503, U.S.A.	TEL: (1) 281-447-2599 FAX: (1) 281-447-6623
MAYEKAWA U.S.A. INC. CHEMICAL PROCESS DIVISION (HUSTON SALES & ENGINEERING OFFICE)	1770 ST. JAMES PLACE, SUITE 408, HOUSTON, TX 77056, U.S.A.	TEL: (1) 832-547-2320
EUROPE and Africa		
N.V.MAYEKAWA EUROPE S.A. (HEAD OFFICE, FACTORY)	LEUVENSESTEENWEG 605, 1930 ZAVENTEM, BELGIUM	TEL: (32) 2-757-9075 FAX: (32) 2-757-9023
MAYEKAWA DEUTSCHLAND GMBH	UNTER-BOHNHOF-STRASSE 38A, D-82110 GERMERING, DEUTSCHLAND	TEL:(49) 89-5527-989-0 FAX:(49)89-5527-989-19
MAYEKAWA DEUTSCHLAND GMBH (HUMBURG OFFICE)	WEIDESTRASSE 122A, 22083 HAMBURG, DEUTSCHLAND	TEL:(49)40-2788-9149-0 FAX:(49)40-2788-9149-9
N.V.MAYEKAWA EUROPE S.A.(UK)	16 OAKHURST GARDENS, BEXLEYHEATH, KENT DA7 5JP, UNITED KINGDOM	TEL: (44) 1322-433558 FAX: (44) 1322-433164

Description	Location	Telephone and facsimile No.
MAYEKAWA. S.L.	CALLE MONTEVIDEO 5, NAVE 13 POL. INDUSTRIAL CAMPORROSO 28806 ALCALA DE HENARES, MADRID, SPAIN	TEL: (34) 91-830-0392 FAX: (34) 91-830-0397
MAYEKAWA FRANCAISE SARL	9, RUE MICHAEL FARADAY, 78180 MONTIGNY-LE-BRETONNEUX, FRANCE	TEL: (33) 1-30-58-26-00 FAX: (33) 1-30-58-19-37
N.V. MAYEKAWA EUROPE MOSCOW REPRESENTATIVE OFFICE	KOROVY VAL ST., 7, OFFICE 228, 119049, MOSCOW,RUSSIA	TEL: (7) 499-230-01-76 FAX: (7) 499-230-21-12
MAYEKAWA INTERTEC AG	ROSENBERGSTRASSE 31, CH-6300 ZUG, SWITZERLAND	TEL: (41) 41-726-8626 FAX: (41) 41-726-8620
MAYEKAWA INTERTEC AG - EGYPT	P.O.BOX 341 NEW CAIRO - 5th SETTLEMENT, NORTH 90th St. THE 47th BUILDING - 4th FLOOR, OFFICE 419, EGYPT	TEL: (20) 22-503-2925 FAX: (20) 22-503-2801
MAYEKAWA INTERTECH AG - ABU DHABI	ALI & SONS BUSINESS CENTER OFFICE No.201 ALI KHALFAN RASHED AL MUTAWA AL DHAHIRI BLDG. PLOT No.29, AL AIN ROAD, UMM AL NAR, ABU DHABI U.A.E. P.O. BOX 129865	TEL: (971) 2-5102-451 FAX: (971) 2-5102-571
MAYEKAWA MIDDLE EAST FZCO	P.O.BOX 61349, PBU: RA08-UC05, JEBEL ALI FREE ZONE, DUBAI, U.A.E.	TEL: (971) 4-888-6363 FAX: (971) 4-888-6373
MAYEKAWA TURKEY SOGUTMA SANAYI VE TICARET LIMITED SIRKETI	ISTANBUL DUNYA TICARET MERKEZI A-2 BLOK KAT 10 No:325 YESILKOY 34149, ISTANBUL, TURKEY	TEL: (90) 212-4653631 FAX: (90) 212-4653635
N.V. MAYEKAWA EUROPE S.A. （BULGARIA）	24,KAMEN ANDREEV STR. 1303, SOFIA, BULGARIA	TEL: (359) 2-8910130 FAX: (359) 2-8910131
MAYEKAWA ITALIA S.R.L. （MILANO OFFICE）	VIA RICCARDO LOMBARDI 19/12, 20153 MILANO, ITALY	TEL: (39) 02-4892-9159 FAX: (39) 02-453-1728
MAYEKAWA ITALIA S.R.L. （BOLOGNA OFFICE）	VIA PRADAZZO 7,40012 CALDERARA DI RENO, BOLOGNA, ITALY	TEL: (39) 051-726-364 FAX: (39) 051-726-804
MAYEKAWA SOUTH AFRICA (PTY) LTD. (CAPE TOWN OFFICE)	WEST END, UNIT 3 PRIME PARK, PRINTERS WAY, MONTAGUE GARDENS 7441, REPUBLIC OF SOUTH AFRICA	TEL: (27) 21-551-1434 FAX: (27) 86-546-3618
ASIA PACIFIC		
MAYEKAWA AUSTRALIA PTY.LTD.	UNIT 2, 44 MCCAULEY STREET MATRAVILLE NSW 2036, AUSTRALIA	TEL: (61) 2-9695-7000 FAX: (61) 2-9695-7001
MAYEKAWA AUSTRALIA PTY. LTD.(NEW ZEALAND OFFICE)	UNIT 2, 30 TUI STREET, OTAHUHU, AUCKLAND 2024, NEW ZEALAND	TEL: (64) 9-276-2305 FAX: (64) 9-276-2306
MAYEKAWA INDIA PVT.LTD. (GURGAON OFFICE)	545, 1st FLOOR, SECTOR-20,VILLAGE DUNDAHERA GURAGAON-122016, HARYANA, INDIA	TEL: (91) 12-4651-0181 FAX: (91) 12-4651-0188

Description	Location	Telephone and facsimile No.
P.T.MAYEKAWA INDONESIA	GRAHA PRATAMA BUILDING, 9TH FLOOR JL. M.T. HARYONO KAV.15 JAKARTA 12810, INDONESIA	TEL: (62) 21-8370-9484 FAX: (62) 21-8370-9483
P.T.MAYEKAWA INDONESIA (MEDAN OFFICE)	JL. SUTRISNO No.274 MEDAN-20215, INDONESIA	TEL: (62) 61-7323627 FAX: (62) 61-7358848
P.T.MAYEKAWA INDONESIA (SURABAYA OFFICE)	BUMI MANDIARI BUILDING, 7TH FLOOR SUITE 702B, JL. JEND. BASUKI RACHMAT No. 129-137, SURABAYA-INDONESIA	TEL: (62) 31-531-6613 FAX: (62) 31-532-4341
MAYEKAWA (M) SDN. BHD.	No.3, JALAN PJU 3/50, SUNWAY DAMANSARA TECHNOLOGY PARK, 47810 PETALING JAYA, SELANGOR, MALAYSIA	TEL: (60) 3-78051406 FAX: (60) 3-78051409
MAYEKAWA PHILIPPINES CORP.	4/F UNIT A AND B SUNTREE TOWER, 13 MERALCO AVENUE, SAN ANTONIO, ORTIGAS CENTER, PASIG CITY 1605, PHILIPPINES	TEL: (63) 2-706-0473 FAX: (63) 2-706-0475
MAYEKAWA PHILIPPINES CORP. (GENARAL SANTOS OFFICE)	ROOM 4, LEAH DAPROZA BUILDING FISCAL DAPROZA AVENUE GENERAL SANTOS CITY 9500, PHILIPPINES	TEL: (63) 83-552-3282 FAX: (63) 83-301-2698
MAYEKAWA SINGAPORE PTE.LTD.	6 TAGORE LANE SINGAPORE 787470	TEL: (65) 6451-1565 FAX: (65) 6451-4932
MAYEKAWA (TAIWAN) CO., LTD. (KAOHSIUNG OFFICE)	No.2-1,XINZHAN RD.,QIANZHEN DIST., KAOHSIUNG CITY,80672 TAIWAN , ROC	TEL: (886) 7-821-0886 FAX: (886) 7-821-4688
MAYEKAWA (TAIWAN) CO., LTD. (CHEMICAL DEPARTMENT)	1F., NO.2, SHIN JANN ROAD, CHIEN CHEN DIST., KAOHSIUNG, TAIWAN 80672, ROC	TEL: (886) 7-812-7709 FAX: (886) 7-812-9019
MAYEKAWA (TAIWAN) CO., LTD. (TAIPEI HEAD OFFICE)	8F, NO, 421, SUNG-SHAN ROAD, TAIPEI, TAIWAN 11083, REP. OF CHINA	TEL: (886) 2-2727-9711 FAX: (886) 2-2759-8484
MAYEKAWA (TAIWAN) CO., LTD. (TAICHUNG BRANCH)	NO. 80-2, SEC.3, HUANJUNG RD., TAICHUNG, TAIWAN, 40755, REP. OF CHINA	TEL: (886) 4-2251-4128 FAX: (886) 4-2251-4129
MAYEKAWA CHINA INDUSTRIES CO., LTD. (SHANGHAI BRANCH)	ROOM 3001, NANZHENG BUILDING, NO.580 WEST NANJING RD., 200041 SHANGHAI, P.R. CHINA	TEL: (86) 21-5234-1988 FAX: (86) 21-5234-1788
MAYEKAWA CHINA MFG.CO., LTD.	201700 PLANT 1, NO.39, WEST XIQING ROAD, QINGPU, SHANHAI, P.R. CHINA	TEL: (86) 21-6920-7718 FAX: (86) 21-6920-7719
MAYEKAWA CHINA MFG.CO., LTD. (GUANGZHOU BRANCH)	RM.1205, TIANLHEFULI BUSINESS MANSION, No.4, HUA TING RD, GUANGZHOU, 510610, CHINA	TEL: (86) 20-8527-6161 FAX: (86) 20-8527-6165
MAYEKAWA CHINA MFG. CO., LTD. (QINGDAO BRANCH)	ROOM 601, FULIN BUILDING NO.87 SOUTH FUZHOU ROAD, SOUTH DISTRICT, QINGDAO CITY, 266071, CHINA	TEL: (86) 532-8602-6169 FAX: (86) 532-8602-6269

Description	Location	Telephone and facsimile No.
MAYEKAWA CHINA MFG. CO., LTD. (DALIAN BRANCH)	RM.A13-5, No.1 BUILDING, AREA A , WUCAI CITY, DALIAN ECO-TECH DEVELOPMENT ZONE, 116100, DALIAN, P. R. CHINA	TEL: (86) 411-8753-9620 FAX: (86)411-8757-9620
MAYEKAWA (THAILAND) CO., LTD. MAYEKAWA HOLDING (THAILAND)CO., LTD.	2/3 MOO 14, 3RD FLOOR BANGNA TOWER BLDG., TOWER A, BANGNA-TRAD RD, K.M.6.5, BANGKAEW BANGPLEE, SAMUTPRAKARN 10540, THAILAND	TEL: (66) 2-751-9610 FAX: (66) 2-751-9565
MAYEKAWA (THAILAND) CO., LTD. (TRANG BRANCH)	1/7 TRANG-PALIAN RD., MUANG, TRANG 92000, THALAND	TEL: (66) 75-224-784 FAX: (66) 75-224-351
MAYEKAWA VIETNAM ONE MEMBER CO., LTD.	ROOM 305, 3FL, TUOI TRE TOWER, 60A HOANG VAN THU, WARD 9, PHU NHUAN DIST., HO CHI MINH CITY, VIETNAM	TEL: (84) 8-3997-5284 FAX: (84) 8-3997-5287
MYCOM KOREA CO., LTD. (HEAD OFFICE)	2F, 345, CHEONGRA-RO , YONGSAN-KU, SEOUL, 140-710, REP.OF KOREA	TEL: (82) 2-796-1766 FAX: (82) 2-798-7715
MYCOM KOREA CO., LTD. CHANGWON FACTORY	19, BANGYE-RO, UICHANG-KU, CHANGWON-SI, GYEONGSANGNAM-DO 641-847, REP.OF KOREA	TEL: (82) 55-294-8678 FAX: (82) 55-299-7678
MYCOM KOREA CO., LTD. (BUSAN BRANCH)	5F, 26, JUNGANG-DAERO, JUNG-GU, BUSAN 600-714, REP.OF KOREA	TEL: (82) 51-242-3737 FAX: (82) 51-243-8542
LATIN AMERICA		
MAYEKAWA ARGENTINA S.A. (BUENOS AIRES OFFICE)	DR. JOSE VALENTIN GOMEZ 151, LOT42, HAEDO-PARTIDO DE MORON, BUENOS AIRES, CP B1706FMA, ARGENTINA	TEL: (54) 11-4627-6660 FAX: (54) 11-4628-1511
MAYEKAWA ARGENTINA S.A. (PUERTO MADRYN OFFICE)	OFICINA PTO. MADRYN LEOPOLDO LUGONES 45 (U9129KDA)-PUERTO MADRYN PCIA DE CHUBUT REPUBLICA ARGENTINA	TEL: (54) 2965-475414 FAX: (54) 2965-475414
MYCOM PERU S.A.C.	CALLE LUIS PASTEUR 1490, LINCE, LIMA, PERU	TEL: (51) 1-205-5400 FAX: (51) 1-222-1543
MAYEKAWA CHILE S.A.C.el. (SANTIAGO OFFICE)	CORDILLERA No.331, MODULO D14, FLEX CENTER, PUERTO VESPUCIO, QUILICURA, SANTIAGO, CHILE	TEL: (56) 2-739-0202 FAX: (56) 2-739-2700
MAYEKAWA CHILE S.A.C.el. (CONCEPCION OFFICE)	ANIBAL PINTO No.215, OFICINA 403, CONCEPCION, CHILE	TEL: (56) 41-223547 FAX: (56) 41-212443
MAYEKAWA CHILE S.A.C.el. (PUERTO MONTT OFFICE)	BERNARDINO 1057 MODULO 6, PARQUE INDUSTRIAL SAN ANDRES PUERTO MONTT, CHILE	TEL: (56) 65-257570 FAX: (56) 65-288073
MAYEKAWA ECUADOR S.A.	CALLE 15B Y AV. GUILLERMO PAREJA C.C.STEFANY LOCAL #4, CALLA.LA GARZOTA 1 MZ.28 SOLOR 13, GUAYAQUIL, ECUADOR	TEL: (593)4-262-9108 TEL: (593)4-262-6407 FAX: -
MAYEKAWA COLOMBIA S.A.S	TRANSVERSAL 93 NO.53-48 INTERIOR 37, PAQUE INDUSTRIAL EL DORADO, BOGOTA, COLOMBIA	TEL: (57) 1-430-9980 TEL: (57) 1-224-3028 FAX: (57) 1-437-0988

Description	Location	Telephone and facsimile No.
MAYEKAWA COLOMBIA S.A.S. (MEDELLIN OFFICE)	DIRECCION CR 43B No. 8 SUR 10 OFICINA 404 EDF. OVIEDO MEDELLIN, COLOMBIA	TEL: (57) 4-313-4343 FAX: (57) 4-313-4343
MAYEKAWA DO BRASIL EQIPAMENTOS INDUSTRIAIS LTDA.	RUA LICATEM 250, BLOCO B/C, JARDIM PEROVA-ARUJA-SP CEP:07428-280, BRASIL	TEL: (55) 11-4654-8000 FAX: (55) 11-4654-8002
MAYEKAWA DO BRASIL LTDA. (BAHIA BRANCH)	RUA DR. JOSE PEROBA, 275 - SALA 902 EDIFICIO METROPOLIS - BAIRRO STIEPE, SALVADOR – BA,CEP:41770-235, BRASIL	TEL: (55) 71-3341-0737 FAX: —
MAYEKAWA DO BRASIL EQIPAMENTOS INDUSTRIAIS LTDA. (CHAPECO BRANCH)	AV. NEREU RAMOS, 75D, SALA 503A, EDIFICIO CENTRO PROFISSIONAL CEP:89801-023 C.P.:177 CHAPECO-SC, BRASIL	TEL: (55) 49-3324-0681 FAX: (55) 49-3322-4241
MAYEKAWA DO BRASIL EQIPAMENTOS INDUSTRIAIS LTDA. (CUIABA BRANCH)	AVENIDA ISSAC POVOAS, 586 – SALA 405 EDIFICIO WALL STREET - CENTRO CUIABA-MT, CEP 78055-560, BRASIL	TEL: (55) 65-3023-7559 FAX: —
MAYEKAWA DO BRASIL EQIPAMENTOS INDUSTRIAIS LTDA. (CURITIBA BRANCH)	RUA XV DE NOVEMBRO, 2175 6 ANDAR SALA 30 SHOPPING CELLI CEP:83005-000 SAO JOSE DOS PINHAIS-PR, BRASIL	TEL: (55) 41-3383-1518 FAX: (55) 41-3383-1987
MAYEKAWA DO BRASIL EQIPAMENTOS INDUSTRIAIS LTDA. (GOIANIA BRANCH)	RUA C, 255 – QUADRA 588 – LOTE 4/8 SALA 104 – CENTRO EMPRESARIAL SEBBA GOIANIA-GO, CEP 74280-010, BRASIL	TEL: (55) 62-3093-5062 FAX: —
MAYEKAWA DO BRASIL EQIPAMENTOS INDUSTRIAIS LTDA. (OESTE PAULISTA BRANCH)	AV. FRANCISCO DE CHAGAS OLIVEIRA, 344 JARDIM PINHEIRO SAO JOSE DO RIO PRETO-SP, CEP 15091-330, BRASIL	TEL: (55) 17-3227-0235 FAX: (55) 17-3227-3120
MAYEKAWA DO BRASIL EQIPAMENTOS INDUSTRIAIS LTDA. (RECIFE BRANCH)	RUA AGENOR LOPES, 292 SALA 305 CEP:51021-110 BOA VIAGEM RECIFE-PE, BRASIL	TEL: (55) 81-3342-7670 FAX: —
MAYEKAWA DO BRASIL EQIPAMENTOS INDUSTRIAIS LTDA. (RIO GRANDE DO SUL BRANCH)	RUA MUCK, 298 – SALA 601 EDIFICIO SANTA HELENA CEP:92010-250 CANOAS-RS, BRASIL	TEL: (55) 51-3429-1860 FAX: (55) 51-3477-5212
MAYEKAWA DO BRASIL EQIPAMENTOS INDUSTRIAIS LTDA. (LINHARES BRANCH)	AV. GOVERNADOR CARLOS LINDENBERG, 873/107 CENTRO CEP:29900-020 LINHARES-ES, BRASIL	TEL: — FAX: —
MAYEKAWA DO BRASIL EQIPAMENTOS INDUSTRIAIS LTDA. (MACAE)	RUA PROFESSOR MARIETA PEIXOTO, 62 CENTRO - MACAE – RJ, CEP 27910-250, BRASIL	TEL: (55) 22-2772-6069 FAX: (55) 22-2759-3112
MAYEKAWA DO BRASIL EQIPAMENTOS INDUSTRIAIS LTDA. (RIO DE JANEIRO BRANCH)	AV.LUIZ CARLOS PRESTES, 350-SALA 313-EDIFICIO BARRA TRADE II, BARRA DA TIJUCA, RIO DE JANEIRO-RJ CEP:22775-055, BRASIL	TEL: (55) 21-2431-3600 FAX: (55) 21-2430-8882
MYCOM CENTROAMERICA S.A	BODEGA #63, CONDOMINIO COMERCIAL TIERRA DOS, EL CACIQUE DE RIO SEGUNDO, ALAJUELA, COSTA RICA	TEL: (506) 2441-4464 FAX: (506) 2441-4465

Description	Location	Telephone and facsimile No.
MYCOM VENEZUELA SALES & SERVICES,C.A. (CARACAS OFFICE)	CALLE LOS MANGOS, EDIFICIO SELEMAR, PISO 8, SABANA GRANDE, CARACAS, VENEZUELA	TEL: (58) 212-216-6026 FAX: (58) 212-216-0608
MYCOM VENEZUELA SALES & SERVICE, C.A. (MARACAY OFFICE)	AV.INTERCOMUNAL TURMERO, EDF.TECHOMAT METROPOLITANO, PISO 1, OFICINA 3, MARACAY, EDO.ARAGUA, VENEZUELA	TEL: (58) 243-269-4913 FAX: (58) 243-269-3952
MYCOM VENEZUELA SALES & SERVICE, C.A. (MARACAIBO OFFICE)	CALLE 148,CENTRO EMPRESARIAL SAN FRANCISCO NIVEL 1 LOCAL 5 Y 6, ZONA INDUSTRIAL IIETAPA,SAN FRANCISCO EDO.ZUILIA, VENEZUELA	TEL: (58) 261-418-1760 FAX: -
MYCOM VENEZUELA SALES & SERVICE, C.A. (BARCELONA OFFICE)	AV. MUNICIPAL DE PTO. LA CRUZ, EDIF. LOCAL NRO.57, PLANTA ALTA, MUNICIPIO SOTILLO, PUERTO LA CRUZ, VENEZUELA	TEL: (58) 261-765-1059
MYCOM CHEMICAL PROCESS CORP. DE VENEZUELA S.A.	CALLE 148,CENTRO EMPRESARIAL SAN FRANCISCO NIVEL 1 LOCAL 5 Y 6, ZONA INDUSTRIAL IIETAPA,SAN FRANCISCO EDO.ZUILIA, VENEZUELA	TEL: (58) 261-418-1760 FAX: -
MAYEKAWA DE MEXICO, S.A. DE C.V. (CUERNAVACA OFFICE)	AV.DE LOS 50MTS.NO.381, CIVAC. JIUTEPEC MORELOS, C.P.62578, MEXICO	TEL: (52) 77-73-19-0925 FAX: (52) 77-73-20-5762
MAYEKAWA DE MEXICO, S.A. DE C.V. (MEXICO CITY OFFICE)	AV.COYOACAN #945 COL .DEL VALLE DEL. BENITO JUAREZ C.P.03100, MEXICO, D.F. MEXICO	TEL: (52) 55-5062-0870 FAX: (52) 55-5062-0898
MAYEKAWA DE MEXICO, S.A. DE C.V. (GUADALAJARA OFFICE)	SANTA MARIA No.3086, COL. VALLARTA SAN LUCAS GUADALAJARA, JALISCO, C.P.44690, MEXICO	TEL: (52) 3336-15-5765 FAX: (52) 3336-15-1307
MAYEKAWA DE MEXICO, S.A. DE C.V. (MONTERREY OFFICE)	AV.CHAPULTEPEC NO.2233 OTE. FRACC, BUENOS AIRES MONTERREY N.L. C.P.64800, MEXICO	TEL: (52) 81-8347-3085 FAX: (52) 81-8347-5830
MAYEKAWA DE MEXICO, S.A. DE C.V. (HERMOSILLO OFFICE)	CALLE FRAY TORIBIO DE BENAVENTE #38 COL. LOS ARCOS CD. HERMOSILLO, SONORA, C.P.83250, MEXICO	TEL: (52) 662-216-2047 FAX: (52) 662-216-2047
MAYEKAWA DE MEXICO, S.A. DE C.V. (IRAPUATO OFFICE)	CALLE AGUSTIN ZARAGOZA NO.219 LOCAL-2 COL.DEPORTIVA, C.P.36612, IRAPUATO, GTO. MEXICO	TEL: (52) 462-624-9353 FAX: (52) 462-624-9264
MAYEKAWA DE MEXICO, S.A. DE C.V. (CULIACAN OFFICE)	AV. NICOLAS BRAVO 1572, LOCAL 1 COL.MORELOS CULIACAN, SINALOA, C.P.80170, MEXICO	TEL: (52) 66-7715-4199 FAX: (52) 66-7715-4150
MAYEKAWA DE MEXICO, S.A. DE C.V. (VILLAHERMOSA OFFICE)	CERRADA DE RIO AMATAN 106-A COL. CASA BLANCA PRIMERA SECCION, VILLAHERMOSA, TABASCO, C.P.86060, MEXICO	TEL: (52) 993-315-4025

MAYEKAWA MFG. CO., LTD.

3-14-15 Botan, Koto-ku, Tokyo 135-8482, JAPAN

TEL : (81)-3-3642-8181 FAX: (81)-3-3643-7094
URL : http://www.mayekawa.com