RKT025_01_2015.12

MAYEKAWA

Model 6HK Reciprocating Compressor

INSTRUCTION MANUAL

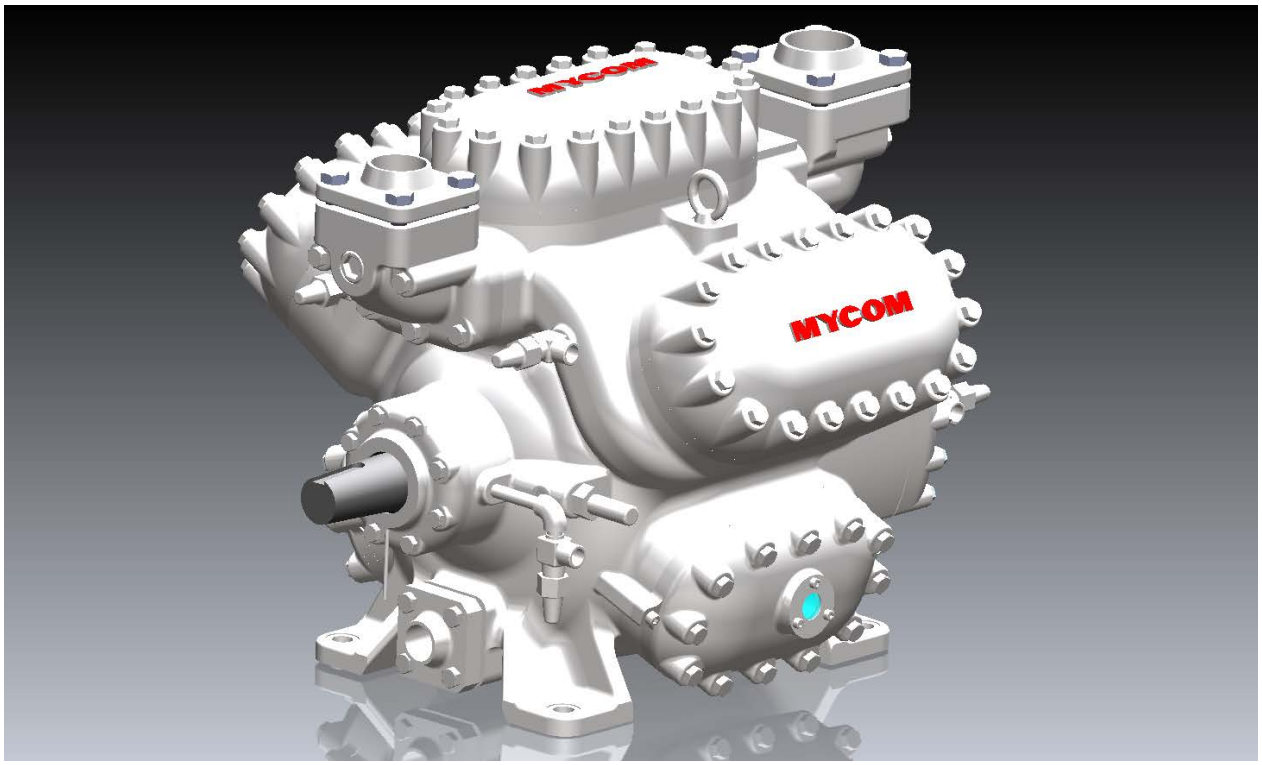

Note!

Keep this instruction manual handy for ready reference when needed.

The contents of this manual are subject to subject to change without prior notice.

MYCOM MAYEKAWA MFG. CO., LTD.

Corporate Office／3-14-15 BOTAN KOTO-KU,
TOKYO 135-8482, JAPAN
Tel: +81 3(3642)8181 Fax: +81 3(3643)7094

Important Safety Information

Be sure to thoroughly read this manual before operating or servicing the product in order to familiarize yourself with the instructions and recommendations in it. During operation and servicing of the product, we urge you to follow these instructions and recommendations. Failure to follow these instructions and recommendations will or could result in death or personal injury and also may cause operational problems or damage not only to the product but also to the related equipment in your system.

Throughout this manual, the instructions especially important for assuring safety and preventing property damages are highlighted using the symbols/letters shown below. You should understand what each symbol/letter alerts to before using this manual.

DANGER	Indicates a hazardous situation which, if not avoided, will result in death or serious injury.
WARNING	Indicates a hazardous situation which, if not avoided, could result in death or serious injury.
CAUTION	Indicates a hazardous situation which, if not avoided, will or could result in minor or moderate injury.

The safety instructions in this manual are not exhaustive. There may be other safety precautions to be observed that vary from user to user. It is your responsibility to establish a safety management system most appropriate for your particular use of the product.

Introduction

MYCOM Model 6HK reciprocating compressors are newly designed compressors suitable for higher design pressure and higher operating pressure than that of existing models such as the W, K and L Series. The Model 6HK compressor is, therefore, suitable for operation in a high-temperature heat pump system using NH_3 refrigerant and a binary refrigeration system using carbon dioxide (CO_2) refrigerant.

The Model 6HK compressor was developed based on the K Series compressor.

The Model 6HK reciprocating compressor operates at a maximum suction pressure of 2.0 MPa and a maximum discharge pressure of 5.0MPa offering wider application to high-temperature heat pump systems using NH_3 refrigerant and binary refrigeration systems using carbon dioxide (CO_2) refrigerant.

The 6HK compressor is designed complete with a built-in piping system except for the oil filter and oil cooler, providing the superior characteristics of the K series compressor while assuring a neat external appearance and easy maintenance accessibility.

All components and parts are manufactured under a high quality management system and maintained up to assembly, inspection and final delivery inspection to assure an extended operating life.

This manual should be read and reread frequently to ensure maximum familiarity with the operation and maintenance work required to maintain the compressor in top condition.
Should you have any questions or comments regarding the contents of this instruction manual, contact Mayekawa Mfg. Co., Ltd. or the MYCOM sales offices or service centers nearest you.

Warranty Notice

Warranty

Mayekawa will repair this product or replace its components free of charge in the case of malfunctions of or damage to the product due to defects in design or workmanship during normal use of the product under conditions not contradicting to the specifications and instructions Mayekawa has given by any means including this manual, provided the malfunctions or damage in question occurs within the warranty period indicated below.

The warranty period shall be 12 months from the date of shipment of the product from the factory.

Mayekawa will not be liable for any personal or property damages consequential to any malfunction of or damage to this product, including but not limited to any loss of business or profits.

Disclaimer of Warranty

Despite the warranty clauses mentioned above, Mayekawa shall be exempted from offering the warranty for malfunctions of and damage to the product that result from any of the following causes:

Malfunctions or damage resulting from natural disaster or other force majeure (including windstorm, intense rainfall, flood, tidal wave, earthquake, land subsidence, thunderbolt, and fire) and any causes beyond the control of Mayekawa

Malfunctions or damage resulting from improper usage of the product, examples of which are the following:

- Malfunctions, damage, or deterioration due to misuse or unacceptable use of the product (including improperly storing the product outdoors or under too hot/humid conditions, too frequent liquid flowback operation*, too frequent start-stop cycles, etc.).
- Malfunctions of or damage to the product resulting from the method of operation or control of those devices or equipment that are not supplied from Mayekawa
- Malfunctions or damage resulting from the use of refrigerants, gases, or lubrication oils not approved for use with the product, or the use of the product under other conditions than those for which the product is designed
- Malfunctions or damage resulting from maintenance or inspection performed in other ways than those recommended by Mayekawa
- Malfunctions or damage resulting from the use of other replacement parts than genuine Mayekawa parts
- Malfunctions or damage resulting from modifications to the product performed according to any instructions not given by Mayekawa
- Malfunctions or damage resulting from the use of the product for any purposes not intended by Mayekawa

* Liquid flow-back operation

Although the compressor normally sucks gaseous refrigerant, it can suck liquid refrigerant due to such causes as a poorly adjusted or damaged expansion valve. We call this state of compressor operation “liquid flow-back operation”. As the compressor cannot compress liquid, it can be damaged when sucking any liquid.

Important Information

Intended Use of Compressor

The MYCOM 6HK reciprocating compressor is for refrigerating, cold storage, air conditioning systems and hot-water supply by using refrigerant. Do not use the compressor for any other purposes that are not intended or departing from the specifications. For the specification of this compressor, refer to "Chapter 2 Specifications of Compressor".

When performing maintenance described make sure that perform the items in this manual in proper and safety procedure.

Important Information for Safe Use of Compressor

Mayekawa cannot anticipate all possible hazards including any potential hazards caused by human errors, and hazards due to the environmental conditions where the compressor is used.

There are plenty of guidelines that must be observed for operating the compressor and the warnings in this manual and safety labels on the compressor are not exhaustive. When operating this compressor, use extreme caution on required personal safety as well as on the items described in this manual.

Listed below are the important rules for safety work with the compressor that apply to all workers including managers and supervisors.

Before using this compressor, carefully read and fully understand the contents written in this manual and reliably follow the safety procedures.

- Operation, maintenance, and inspection of this compressor should only be performed by qualified personal educated about the fundamentals of the compressor and trained about the hazards involved and the measures to avoid danger.
- Do not allow any person other than those who are educated about fundamental expertise of the compressor and trained about the hazards involved and the measures to avoid dangers to approach the compressor while it is operating or while performing maintenance.
- Observe all related federal/national and local codes and regulations and instructions of our sales offices, service centers or agencies.
- This compressor may be modified without any prior notice. Therefore, the appearance of actual compressor may slightly differ from the descriptions in this manual. If you have any questions, contact your sales offices or service centers.
- To prevent an accident, do not attempt to carry out any operation or maintenance other than those described in this manual, or use the compressor for any unapproved purpose.
- Replace the parts with the MAYEKAWA genuine parts.
- Every worker including managers and supervisors should actively participate in activities to insure health and safety in the workplace.

Observe the following precautions when performing maintenance work on electrical control.

- Electrical maintenance of the compressor must be performed by certified/qualified personal and only those educated about the electrical control of the compressor.
- Before servicing or inspecting the electrical equipment or devices, turn "OFF" the motor main power and control power, and perform lockout/tagout to prevent them from being turned on during the work.

Even when the motor main power and control power are turned "OFF", the compressor may be alive if the power is supplied from outside of the refrigeration system, cold storage, and air conditioning systems. In such cases, be sure to shut off the power supply on the power source, and perform lockout/tagout to prevent the compressor from being turned on during the work.

About This Manual

- This manual is written in English. If any other language is required it is the customers responsibility to prepare a manual for safety education and operation instructions.
- This manual is copyrighted by Mayekawa. The drawings and technical references including this manual shall not, in whole or part, be copied, photocopied, or reproduced to any electronic medium or machine-readable form without any prior permission from Mayekawa.
- The photos or drawings included in this manual may slightly differ from the appearance of actual compressor.
- If this manual is lost or damaged, immediately place a purchase order to your local sales offices or service centers for a new one. Using the compressor without the manual may result in safety issues.
- If you resell the compressor, never fail to attach this manual to the compressor.
- If there is an article of agreement regarding descriptions in this manual and specification of this compressor, the description written on that agreement takes precedence in principle.
- Descriptions in this manual and specification of this compressor is subject to change without notice.

Construction of This Manual

Title of Section and Chapter	Description Details
Important Safety information	Describes the safety work and signal words in this manual.
Preface	Describes the outline of this manual and how to read this manual.
Warranty and Disclaimer	Describes clauses and coverage of warranty. Exclusion of warranty clauses is described as disclaimer.
Important Information	Describes important information related to the compressor and this manual.
1. Safety	Describes safety information for the workers, safety rules for this compressor, and management details regarding the work safety that is required for handling the compressor.
2. Specification and Configuration of Compressor	Describes the main components of the compressor, functional information, specification, and operation limits.
3. Model HK compressor Mechanisms	Describes each mechanism of HK compressors.
4. Names of Parts and Functions	Describes names of parts and functions of this product.
5. Installation and Operation	Describes precautions for use this product.
6. Maintenance and Inspection	Describes maintenance and inspection of this product.
7. Lubrication oil	Describes function, characteristics and selection of lubrication oil used for this product.
8. Disassembly	Explains disassembly of this product.
9. Reassembly	Explains reassembly of this product
10. Parts inspection and replacement standards	Describes Parts inspection and replacement standards of this product.
11. Service data	Contains support documentation such as part exploded views and parts list.

How to Order MAYEKAWA Genuine Parts

Confirm the applicable parts in "7.1 Development View and Configuration Table of the Parts" of "Chapter 11 Service Data". Then, inform the product name, part number, part name, and required quantity to our sales offices or service centers.

Inquiry

If you need further information or have any questions, please contact your local sales offices or service centers.

name	Location	Telephone and Facsimile No.
MAYEKAWA MFG. CO., LTD (Corporate OFFICE)	3-14-15 BOTAN KOTO-KU, TOKYO 135-8482, JAPAN	TEL: +81 3-3642-8181 FAX: +81 3-3643-7094
MAYEKAWA MFG. CO., LTD (MORIYA PLANT)	2000, TAYSUZAWA MORIYA- SHI, IBARAKI PREF., 302-0118, JAPAN	TEL: +81 297-48-1361 FAX: +81 297-48-5269

To confirm the latest local sales offices and services centers information please visit our website;
http://www.mayekawa.com/about/network/

Revision history

Document name	Model 6HK Reciprocating Compressor Instruction Manual	Document No.	RKT025_01_2015.12	The first issue date	2010/10/01

Revision No.	Issue date	Contents of revisions (modified clause, page, and details)
Rev.0	2010.10.1	Integration of “installation, operation and routine” version and “maintenance” version. Newly added parts, newly added explanation of part shape change and change of illustration in text caused by design modification.
Rev.1	2015.12.26	An error in writing, correction. Oil filter is for “6HK”. Bolts for discharge Valve seat are M8×L40.

Table of Contents

Chapter 1 Safety

1. 1 Basic Safety

The 6HK Reciprocating Compressor Instruction Manual has been prepared to assure maximum effective operation of the compressor as well as to ensure the safety of those involved in overhauling and maintenance of the compressor and related parts. Read this manual carefully in order to familiarize yourself with the structure and procedures before undertaking disassembly and reassembly of this compressor. Failure to follow the instructions given in this manual may result in possible personal injury and/or serious compressor damage.

WARNING

Should this compressor be operated carelessly and in disregard of the instructions given in this manual, death or serious injury may result.Those who are involved in performing maintenance should read this manual carefully before commencing the work.

- Keep this manual in a convenient, easily-accessible location near the compressor and study periodically and frequently.
- Do not commence overhauling or maintenance work on the compressor before reading and fully understanding this instruction manual.
- Prior to commencing any inspection or maintenance work on the compressor, read the safety warnings provided at the front of each chapter.
- Prior to commencing overhauling or maintenance work on the compressor, read the instruction manual to understand and familiarize yourself with all tools used.
- Management of this compressor and related components for the refrigeration system should be strictly controlled and unauthorized persons should not be allowed to touch the equipment (except for the control valves and switches in an emergency).
- If this manual is lost or damaged, a replacement should be obtained immediately from Mayekawa Mfg. Co., Ltd. or the nearest representative in your region.
- If ownership of the compressor passes to another party, this instruction manual or the electronic data file, (FD, MO, CD, etc.) containing this manual should be always accompanied with the compressor.
- Mayekawa Mfg. Co., Ltd. reserves the right to make changes or improvements to its products without notice. It is possible, therefore, that some explanations given in this manual may not apply to a particular machine. If any question exists regarding this instruction manual, contact Mayekawa Mfg. Co., Ltd. or the nearest representative in your region.
- If you have any question about this manual and the compressor, please contact to Mayekawa Mfg. Co., Ltd. or the nearest representative in your region.
- - Various warning labels are affixed to the compressor. Do not deface or peel off these warning labels.

１．２ Safety Information

Safety information indicates safety precautions described in this instruction manual. Failure to follow any and all cautionary safety information instructions may result in possible personal injury, death and/or serious compressor damage.

５．１ Centering Alignment Work on the Compressor Unit

DANGER

・Before commencing centering alignment work for the compressor and the drive motor, turn off the main power supply and the control power supply switch. Special care must be taken to ensure that the power supply is never connected or turned on when working on the system. If energized during service work, the compressor may start up, posing a threat of electric shock or physical harm to anyone in the vicinity of the belt drive or shaft.

WARNING

・Special care must be taken when turning power source On or Off to avoid electric shock.

CAUTION

・Centering alignment work for the compressor and drive motor should always be carried out using the designated tools only. Use of inappropriate, worn or damaged tools may lead to serious injury.

５．２ Piping Work

DANGER

・Do not use oxygen or combustible gas for air-tight testing as there is a risk of explosion.

CAUTION

・。Do not use CO_2 gas for air-tight testing of an ammonia（NH_3）compressor as there is the possibility of generation of ammonium carbonate, which is harmful to the system.

5．3 Precautions on Operation

DANGER

・Confirm the status of all valves before starting operation. If the compressor is started while the high-pressure side discharge valve is closed, the compressor will explode so special care must be taken. If any valve connected to the control switch is left closed, the respective protection device will not be activated.

・The gate valve of the safety valve should always be left fully open, except when testing and inspection of the safety valve.

・Mount the coupling guard before starting operation, otherwise death or serious injury may result due to entrapment in the rotating portion.

・For adjustment of the control valves or inspection during operation of the compressor, special care must be taken to assure safety. There are various risks associated with operation of the compressor such as death, physical injury, scarring, electric shock, etc.

6 Maintenance and Inspection

DANGER

・Before undertaking inspection and maintenance work, turn off the main power supply and the control power supply switches. Special care must be taken to ensure that the power supply is never connected or turned on when working on the compressor. If energized during the aforesaid service work, the compressor may start, posing a threat of electric shock or physical harm to anyone in the vicinity of the rotating shaft.

・For adjustment of the control valves or inspection during operation of the compressor, special care must be taken to assure safety. There are various risks associated with operation of the compressor such as death, physical injury, scarring, electric shock, etc.

WARNING

・Before commencing inspection or undertaking maintenance service work, turn off the power supply to the heater and related equipment. Special care must be taken to ensure that the power supply is not connected or turned on during the aforesaid service work, posing a threat of electric shock, physical injury, scarring, etc.

・Special care must be taken when turning the power source On or Off to avoid the electric shock.

8 Disassembly

DANGER

・Before commencing overhaul and maintenance work on the compressor, turn off the main motor power supply and the control power supply switch. Special care must be taken to ensure that the power supply is never connected or turned on when working on the system. If energized during service work, the compressor may start up, posing a threat of electric shock or physical harm to anyone in the vicinity of the rotating shaft.

WARNING

・Before commencing overhaul and maintenance work, turn off the main motor power supply, the control power supply and the heater switch. If energized during service work, there is a risk of electric shock, burns or other physical harm.

・Special care must be taken when turning the power source On and Off to avoid electric shock.

8．1 Preparations for Disassembly

DANGER

・Before undertaking disassembly of the compressor, remove the refrigerant from inside the compressor crankcase and confirm that the internal pressure is equal to the atmospheric pressure. If high pressure refrigerant gas or oil remains inside the crankcase, there is a possible of blow off during disassembly, posing a danger of explosion, suffocation, fainting, poisoning, etc.

・If the refrigerant is an irritant or poisonous type, neutralize the refrigerant using nitrogen or dry air to reduce the density as much as possible. Care must be taken when removing covers, etc. Do not face the gas outlet port when opening, taking the risk of absorbing gas, poisoning or fainting, etc. into consideration.

・Should a considerable amount of refrigerant be exhausted inside a closed space including a machine room, it can lead to suffocation or poisoning. Countermeasures for ventilation and refreshment of air inside the closed room are essential.

８．１．２ Cautions on Disassembly

CAUTION

・Always use the regular specified hand tool kit only for compressor disassembly and assembly work. Use of inappropriate, worn or damaged tools may lead to serious injury.

・ Use the maintenance hand tools only after fully understanding utilization and familiarization with the characteristics thereof.

・ Prepare safety shoes, safety goggles, gas mask and other proper safety wear. Use these as necessary.

・ Spare parts are covered with oil to prevent rusting and are prone to slipping when handled. Care must be taken when handling spare parts to avoid dropping and physical injury.

・ Ensure sufficient space to carry out the maintenance work. Care must be taken not to place spare parts or wiring cable carelessly on the floor as this poses a hazard which may cause tripping.

・ Always keep the floor clean. If the floor is stained with oil, etc., it poses a risk of causing falls. Wipe up all stains and foreign matter immediately.

・ Keep hand tools clean during the service work. Dirty tools can leave harmful residue in the compressor, leading to serious malfunction and damage during operation.

9 Reassembly

DANGER

・Do not use oxygen or combustible gas for air-tight testing as there is a risk of explosion.

CAUTION

・Always use the appropriate specific hand tool kit only for disassembly and assembly work of the compressor. Use of inappropriate, worn or damaged tools may lead to serious injury.

・Use the maintenance hand tools only after fully understanding and familiarization with the characteristics thereof.

・Prepare safety shoes, safety goggles, gas mask and other proper safety wear. Use these as necessary.

・Spare parts are covered with oil to prevent rusting and are prone to slipping when handled. Care must be taken when handling spare parts to avoid dropping and physical injury.

・Ensure sufficient space to carry out the maintenance work. Care must be taken not to place spare parts or the wiring cables carelessly on the floor as this poses a hazard which may cause tripping.

・Always keep the floor clean. If the floor is stained with oil, etc., it poses a risk of falling down. Wipe up all stains and foreign matter immediately.

・Keep the hand tools clean during the service work. Dirty tools can leave harmful residue in the compressor, leading to serious malfunction and damage during operation.

・Do not use CO_2 gas for air-tight testing of an ammonia (NH_3) compressor as there is the possibility of generation of ammonia carbonate, which is harmful to the system.

１０ Parts Inspection and Replacement

WARNING

・MYCOM genuine parts must always be used as replacements. If bogus parts or the like manufactured by third parties are used in the compressor instead of genuine parts, malfunctions, electric shock and serious accidents such as personal injury may result.

1．3 Warning Label Locations

Safety and cautionary warning labels are affixed to the compressor at the points shown below.

These labels must be kept clean at all times and should never be removed from the compressor. If any label is stained or lost, contact any of the offices or sales/service centers to order a new label and surely stick it.

High temperature(Head cover) Electric shock(Around Sol. valve) Rotating portion(Adjacent to crankcase)

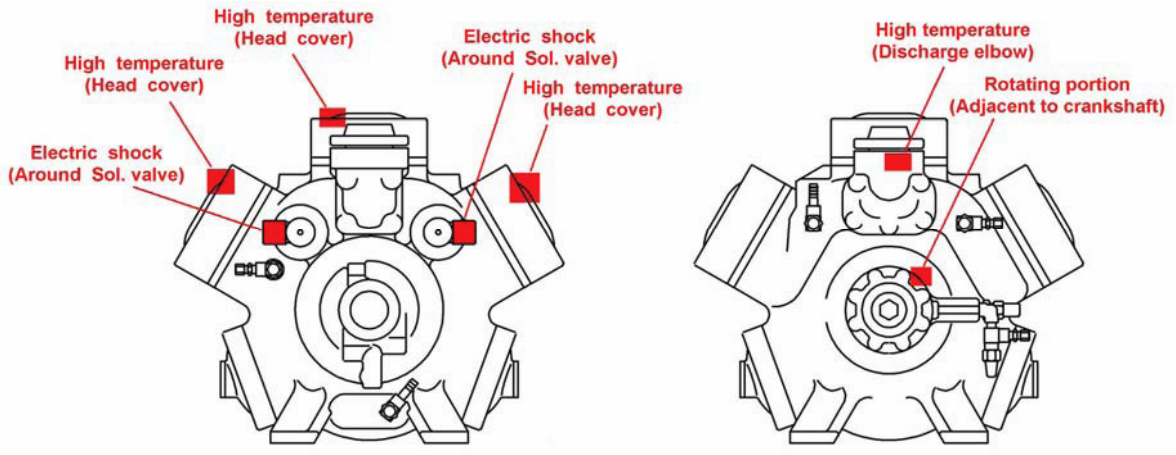

Fig. 1.1 Warning label locations

Chapter 2 Product Specifications

2．1 Product Specifications

Model			C6HK	N6HK
Refrigerant			CO_2	NH_3
Bore dia.×Stroke [mm]			φ85×65	
Number of cylinders			6	
Head Cover Cooling			air-cooled	Water-cooled※1
Oil cooler (Standard)			None	Water-cooled※1
Revolution speed [rpm]			900 to 1800	900 to 1600
Driving system			Direct-coupling	
Rotation direction			clockwise rotation seen from the end surface of shaft seal	
Swept volume(m^3/h)		900[rpm]	119.51	119.51
		1200[rpm]	159.34	159.34
		1600[rpm]	212.45	212.45
		1800[rpm]	239.01	-
Capacity control	Step [%]		100、66、33	
	method		Oil pressured solenoid valve（loaded during power on）	
	power source		100V、110V or 200V、220V	
Safety valve			Externally mounted safety valve	
Lubrication oil	Viscosity		(when in use ISO-VG32 level) Inter-soluble oil：ISO-VG 46-68 Non inter- soluble oil：ISO-VG 32-68	
	Standard Quantity of Oil [L]		6	6.7
Connection Piping	Suction		65A （Flange：JIS RTK ）	
	Discharge		50A	
Net weight [kg]			350	360
Design pressure of pressure vessel [MPa] ※2			High pressure side；5.6 Low pressure side；2.5	
Pneumatic test pressure [MPa] ※2			High pressure side；5.6 Low pressure side；2.5	
Hydrostatic test pressure [MPa] ※2			High pressure side；8.4 Low pressure side；3.8	
Max. operating pressure [MPa] ※2			Discharge pressure；5.0 Suction pressure；2.0 Differential pressure between High & Low pressures；3.5	

※1： Seawater or corrosive water should not be used for cooling water.
※2： Pressure values are based on Gauge Pressure.

※ This product is applicable to indoor and land use, not to outdoor nor vessels.

2．2 Operational Limits

No.	Item	Limit value	Remarks
1	Max. discharge pressure	5.0 MPa	・Crankcase Design Pressure High pressure portion：5.6 MPa Low pressure portion：2.5 MPa
2	Max. suction pressure	2.0 MPa	
3	Max. differential pressure between HP and LP sides	3.5 MPa	
4	Min. suction pressure	NH_3 0.35MPa CO_2 0.43MPa	・Excludes pump down in short time
5	Min. compression rate	1.5	
6	Max. oil supply pressure	Ps＋0.4 MPa	・Set pressure Ps＋0.2 to 0.3 MPa （Ps；Suction pressure）
7	Min. oil supply pressure	Ps＋0.1 MPa	
8	Min. suction temperature	－60 ℃	
9	Max. discharge temperature	＋140 ℃	
10	Max. oil supply temperature	＋70 ℃	・The temperature of inside the oil chamber or inlet of the oil cooler ・Maintaining oil viscosity ・In the case that CO_2 refrigerant is used and the temperature exceeds 60℃, oil cooler specification is employed.
11	Min. oil supply temperature	＋30 ℃	
12	Max. water supply temperature	＋50℃	
13	Min. water supply temperature	＋15℃	・Do not condensate refrigerant in a compressor.
14	Max. revolution speed	1800 rpm	・1600rpm when NH_3 used
15	Min. revolution speed	900 rpm	

※Pressures in the table are based on the gauge pressure.

Chapter3. Model HK Compressor Mechanism

３．１ Gas Compression Mechanism and Gas Flow

Refrigerant gasified in the evaporator is fed to the compressor through the piping system and enters the suction gas chamber in the crankcase through the suction elbow after passing through the suction filter. The compressor crankcase is provided with a suction gas chamber and crankshaft chamber. The suction gas chamber is provided with cylinders and pistons. Pistons in the cylinders are connected to the crankshaft by connecting rods and perform up and down movement as the crankshaft rotates. A suction/discharge valve mechanism, actuated by the pressure difference existing between before and after the valves, is fitted to the unit.

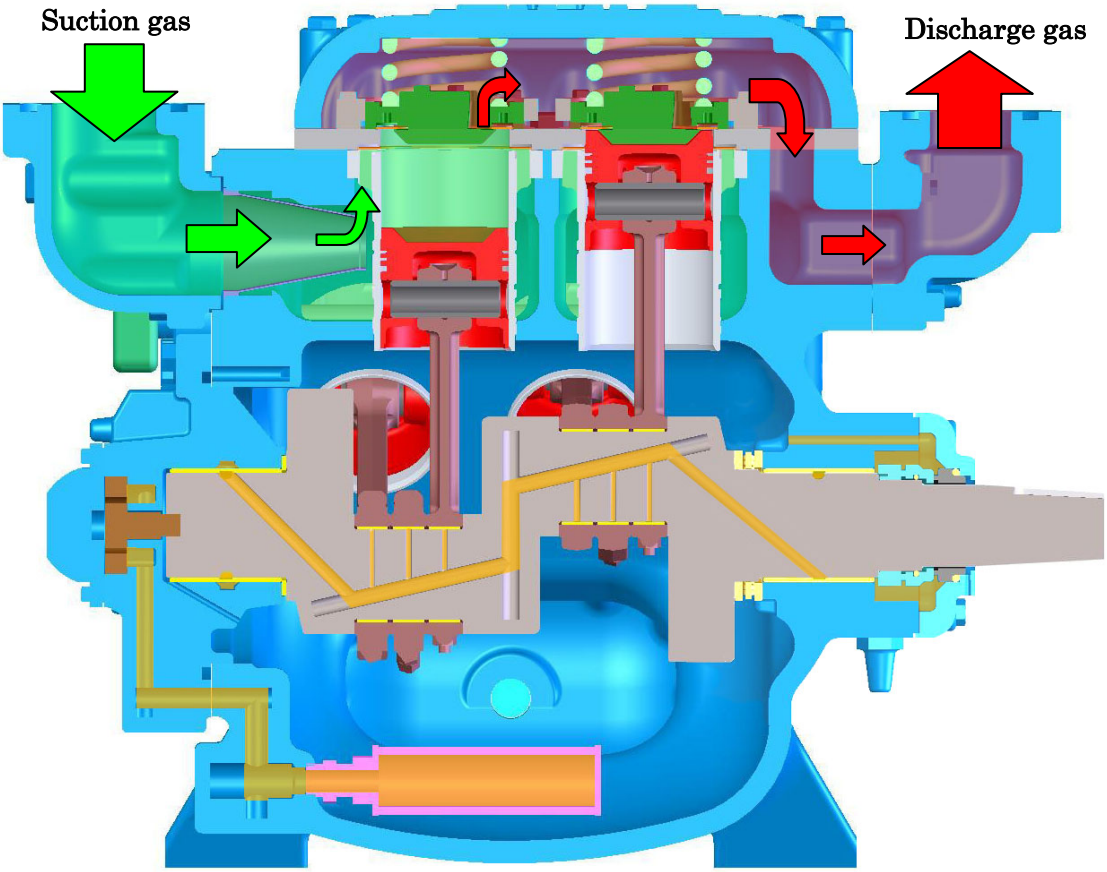

Fig.3.1 Refrigerant gas flow

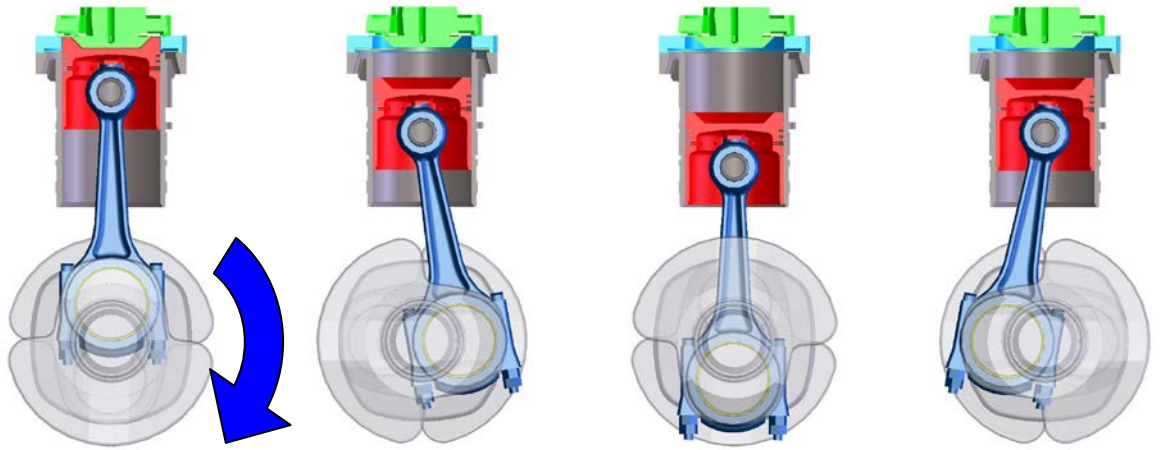

Top dead center　　Suction stroke　　Bottom dead center　　Discharge stroke

Fig.3.2 Crankshaft and Piston Movement

Internal pressure drops as the piston descends in the cylinder and gas in the suction chamber pushes up the suction valve and flows into the cylinder. When the piston reaches bottom dead center, gas flow stops and the suction valve is then pressed against the seat by spring force to seal the cylinder.

When the piston begins to ascend, the internal volume of the cylinder is reduced and the pressure rises as the gas is compressed, i.e., compression stroke. When the cylinder internal pressure becomes higher than the discharge side pressure, the gas pushes up the discharge valve and is discharged to the high pressure side from the cylinder. When the piston reaches top dead center, gas flow stops and the discharge valve is press-fitted against the seat by spring force to seal the cylinder in the same manner as for the suction valve. The aforesaid suction/discharge stroke movement is performed once per one rotation of the crankshaft, thus gas compression is achieved.

This compressed high pressure gas is fed to the condenser through the discharge elbow, cooled down and liquefied, then decompressed by the expansion valve, transferred to the evaporator to circulate within the refrigeration cycle. The compressor acts as a thermo pump in the refrigeration cycle to transfer the thermal energy from the low stage side to the high stage side.

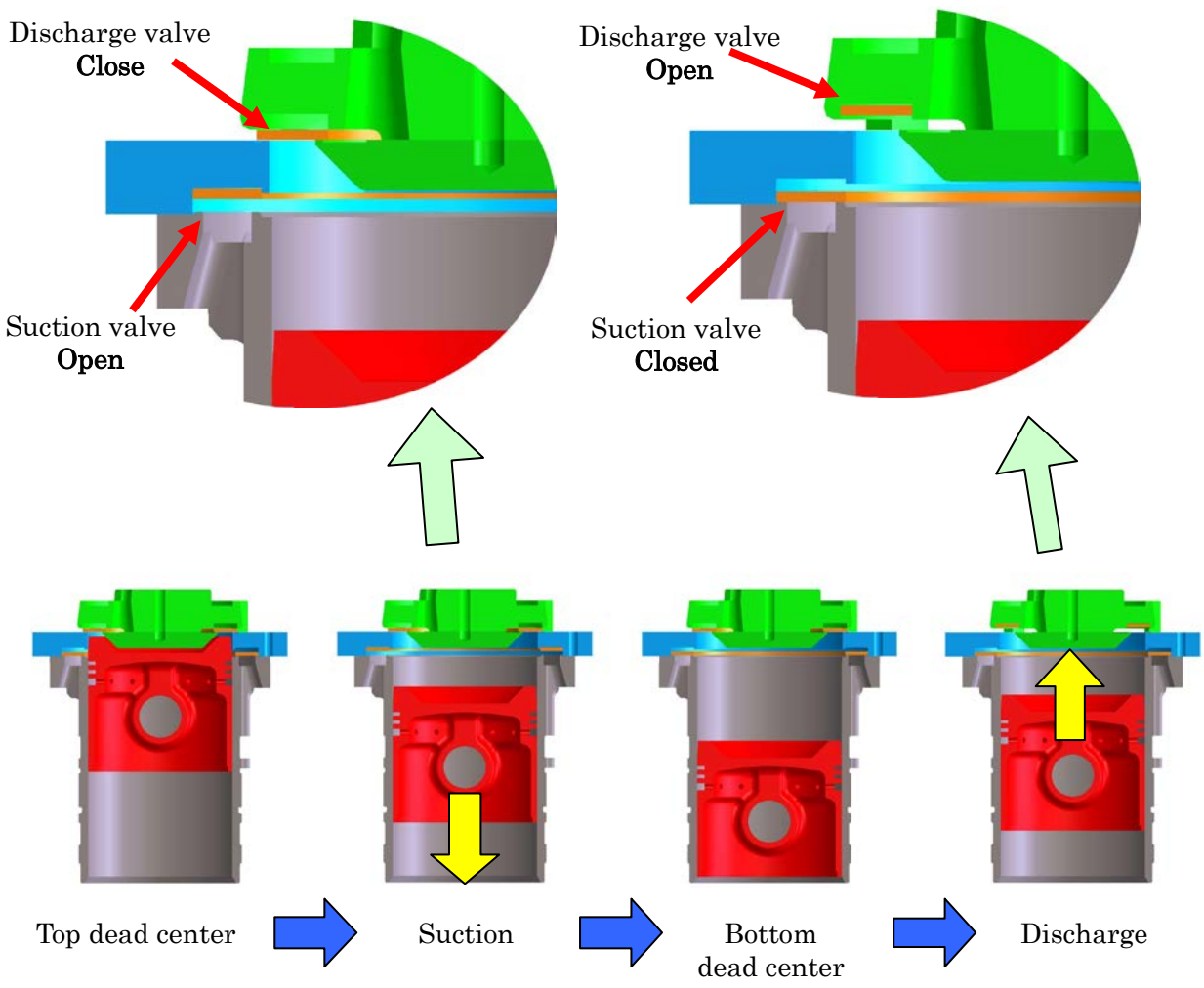

Fig.3.3 Movement of Plate Valve at
Each Different Stroke

3.2 Suction/Discharge Valves and Head Spring Mechanism

The design of the Valve Plate (P/N73) of the Model 6HK reciprocating compressor is the same as that found on the K Series compressor, i.e., only one valve plate for two cylinders. The discharge valve assemblies are press-fitted to the valve plate with the headspring (Part No. 117) along with the guide.

The components are designed to function as an assembly to protect the parts, such as the valve plate, piston, etc. from damage in the event of an unforeseen sharp change in pressure due to liquid refrigerant flow back or liquid compression.

The shapes of the piston and discharge valve seat are designed to minimize the remaining volume (dead volume) when the piston reaches to the top dead center. The suction and discharge plate valves are of the ring-shaped valve type. The suction plate valve spring and discharge plate valve spring are both volute spring types to increase flexibility against variations in spring power. In addition to the above, the rear surface of the spring is provided with a gas damper to absorb percussion.

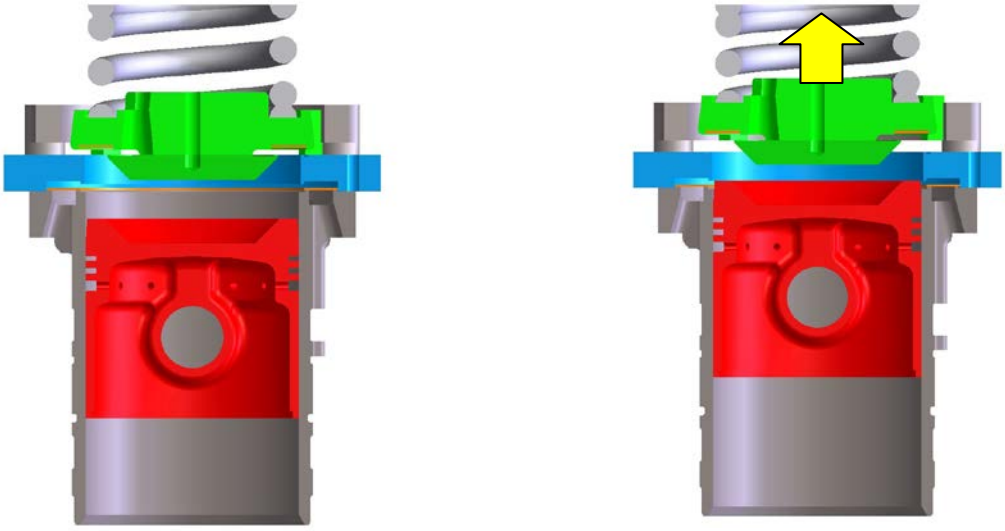

Normal status

During liquid compression
(Headspring is functioning)

Fig.3.4 Headspring mechanism

3．3 Capacity Control Mechanism

Capacity control is achieved by controlling operation of the suction valves using an oil pressurized piston and cylinder. The capacity is changed by lift pins mechanism controls the number of cylinders compressing gas.

Each suction valve seat is provided with a flange on the top of the cylinder sleeve. Gas flows into the cylinder through an intermediate passage between the outer seat and the inner seat. A lift pin, which moves up and down, is provided at the center of the suction valve seat. The top of the pin contacts the suction valve and the bottom of the pin contacts inclined portion of the cam ring, which rotates around the cylinder. The cam ring is designed to rotate when activated by a rod driven by oil pressure and the lift pin moves up and down as the cam ring rotates.

When the top of the lift pin is lower than the seat face, the suction valve operates freely on the seat due to the differential pressure of the gas before and behind the valve. When the lift pin pushes up the suction valve due to rotation of the cam, the suction valve does not operate, even if differential pressure exists. In this condition, gas is not discharged but merely flows in and out the suction port as the piston moves up and down, so the pressure does not rise. The cylinder is therefore in a “no-load” condition. Compressor capacity is controlled by changing the number of cylinders actually compressing gas. The cam rings of the cylinders are activated by oil and spring force.

When oil pressure acts on the cam of a particular cylinder, that cylinder is in a “no-load” condition. Consequently, capacity control during operation is effected by shutting off oil pressure to particular cylinders. This is accomplished using a three-way solenoid valve.

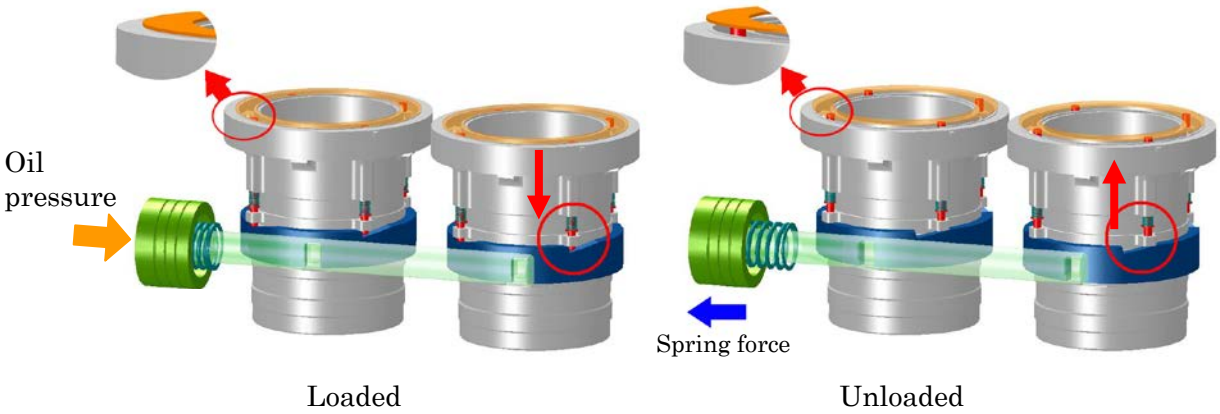

Fig.3.5 Capacity Control (Unloader) Mechanism

Model 6HK

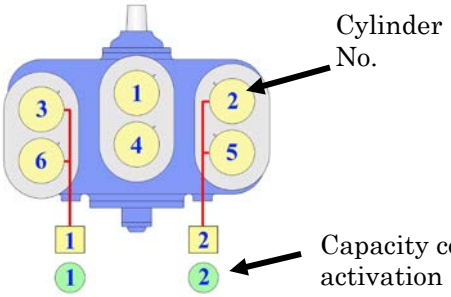

Model 6HK

Cyl. No.	0%	33%	66%	100%
1	Stop	●	●	●
2		—	—	●
3		—	●	●
4		●	●	●
5		—	—	●
6		—	●	●

Fig.3.6 Capacity Control Sequence and Load factor

3．4 Oil Supply Mechanism

3．4．1 Oil flow

The oil supply passage of the Model HK compressor consists of internal oil passage as that of the Model K compressor, i.e., an oil cored hole and processed piercing oil hole for the oil pump. The bottom of the crankshaft chamber in the crankcase serves as an oil reservoir. Oil is sucked into the crankshaft-driven oil pump through an oil filter (#200 mesh) and is pressurized. Oil discharged from the oil pump is separated and supplied along two different paths, one for the capacity control (Unloader) mechanism and the other for circulating from the lower portion of the bearing head through the external oil filter (20μm) and the oil cooler, if needed, then to the oil reservoir in the crankcase.

Returned oil to the crankcase is supplied to the main bushing and fed from an oil groove on the crankshaft to the oil hole of the crankcase. Part of returned oil passing through the crankshaft lubricates the crankpin portion, piton pins on the side of the small end of the connecting rod and journal portion. The oil is spread to lubricate and cool the inner wall of the cylinders and piston rings.

After lubricating the seal side main bushing, lubrication oil passing through the crankshaft is fed to the mechanical seal. Supplying oil to the mechanical seal is provided in the seal box after throttled and decompressed then the oil returns to the oil reservoir.

The oil fed to the capacity control (Unloader) mechanism flows to each unloader cover built in solenoid valve through the oil groove on the bearing head and the holes on crankcase. When solenoid valves apply current (ON), lubrication oil flows to unloader cylinders and pushes unloader pistons making no-loaded condition. Then the oil flow stops but the unloader position still remains by oil pressure.

When the solenoid valve is turned OFF, oil supplied from the pump is shut off and the pressure in the cylinder conforms to the internal pressure of the crankcase. Oil in the cylinder is then pushed out by spring force to create a no-loaded condition.

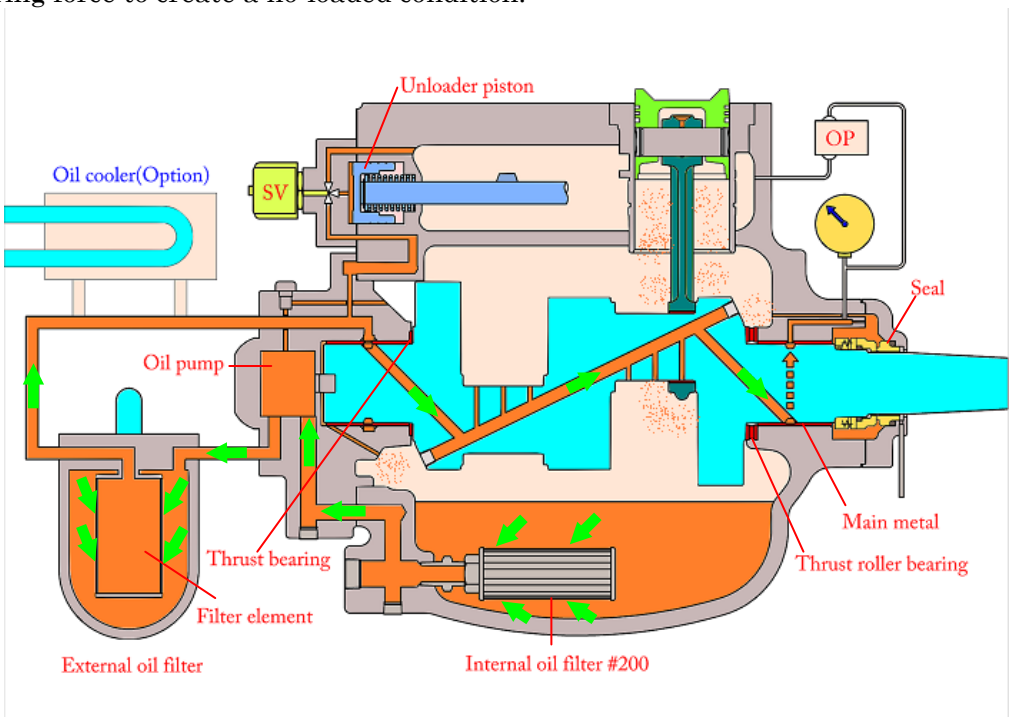

Fig.3.7 Oil supply flow

３．４．２When Oil Cooler is Utilized

When an oil cooler is utilized, it should be installed so that lubrication oil flows the oil cooler after passing through the external oil filter. Oil passing through the oil cooler returns to the compressor crankcase through the right side of the oil pump.

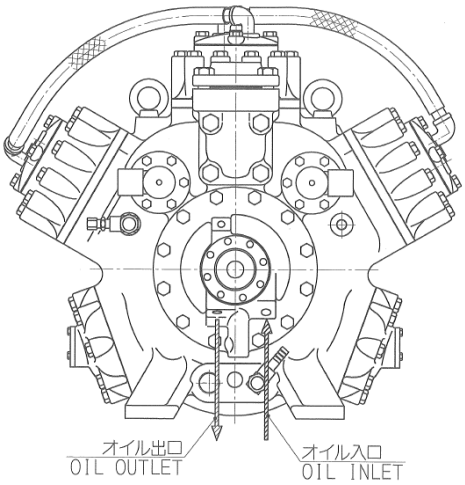

3．4．3 Quantity of Oil Inside Crankcase

The quantity of oil inside the compressor crankcase can be confirmed by monitoring the oil level in the oil sight glass. Oil inside the crankcase is sent to the condenser, receiver, evaporator, etc. during operation of the compressor. The oil level is therefore goes down as operation of the compressor continues. When the oil level in the oil sight glass reaches the lowest level, recharge the oil. When charging oil, care must be taken to prevent overcharging, otherwise excessive oil will stirred by the crankshaft and oil temperature will go up during operation.

The oil side volume of the oil cooler is approx. 0.7 lit., and the volume of oil used for the Model HK compressor is approx. 6 lit. When an oil cooler is used, add the oil side volume of the oil cooler (0.7 lit.) to the volume of oil used for the Model HK compressor (6 lit), i.e., 6.7 lit. in total.

3．5 Shaft Seal

The shaft seal incorporated in the Model HK compressor was selected taking into consideration the most reliable yet simplest design. The rolling portion of contact face of the shaft seal is finished with a combination of special cast iron and carbon. O-ring packing is used.

The seal is a balance type single seal, which rotates in the lubricating oil stored in the seal box. Supplying oil sufficiently keeps both cooling and lubricating conditions preferable.

The lubricating oil is decompressed while passing through the oil feeding path by the throttle and supplied to the seal box, then returned to the crankshaft chamber through the oil outlet port at the top of the seal box. The oil outlet port is larger than the diameter of the throttle, and the space inside the seal box is designed to be almost equal to the inner space of the crankshaft chamber.

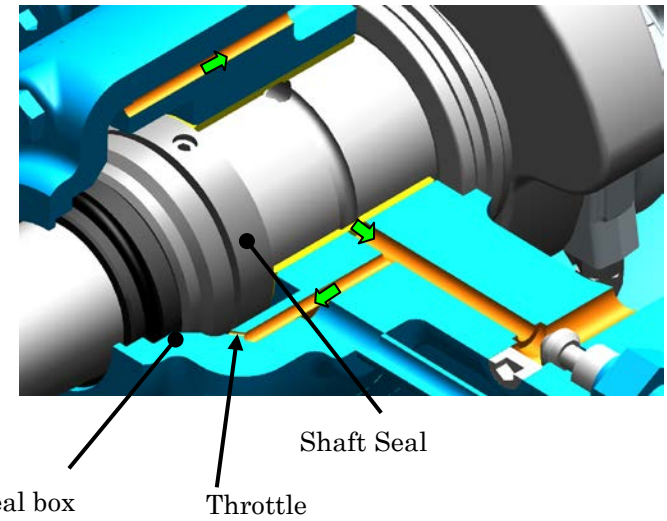

Fig.3.8 Oblique view of Mechanical Shaft Seal

3．6 Oil Cooler

Regardless of whether NH_3 or CO_2 refrigerant is used, it is possible for the lubricating oil to become superheated depending on the operating conditions. It is, therefore, necessary to install an oil cooler to prevent the rotating portion from becoming superheated while maintaining the temperature and viscosity of the lubricating oil. The oil cooler is installed on the low-pressure side oil supply path. Any kind of oil cooler can be selected from water-cooled type, air-cooled type or refrigerant-cooled type, which are subject to the requirements of the design pressure, limited pressure loss and heat transfer performance.

3．7 Accessories

Accessories differ according to the type of compressor, i.e., bare compressor, packaged unit etc.

３．７．１ Crankshaft Key

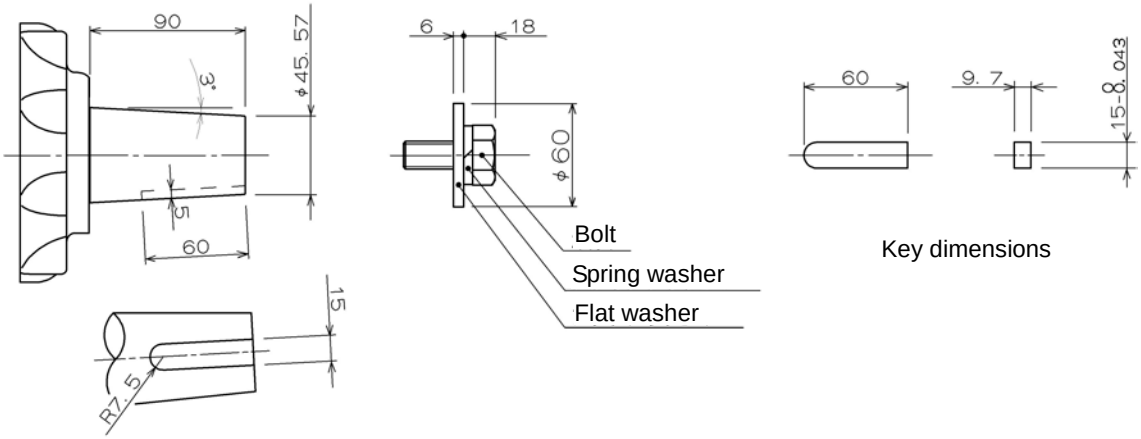

Fig.3.9 Crankshaft key end portion and dimensions

3．7．2 Direct Coupling

The form-flex, double flexing type coupling is standard coupling for direct drive.

It consists of three major components, i.e., a hub, spacers and an element made of laminated square flexible plate together with the connecting bolts, nuts and washers as shown in Fig. 3.10.

The coupling function is maximum power transmission and a coupling element made of thin laminated stainless steel is utilized to ensure maximum power transmission performance and superior flexibility. Due to the simplicity of the construction, which does not utilize any frictional parts such as rubber, the durability of the coupling is unsurpassed. By utilizing a double flexible mechanism with the spacer, inspection of the seal portion can be easily carried out without removing the motor.

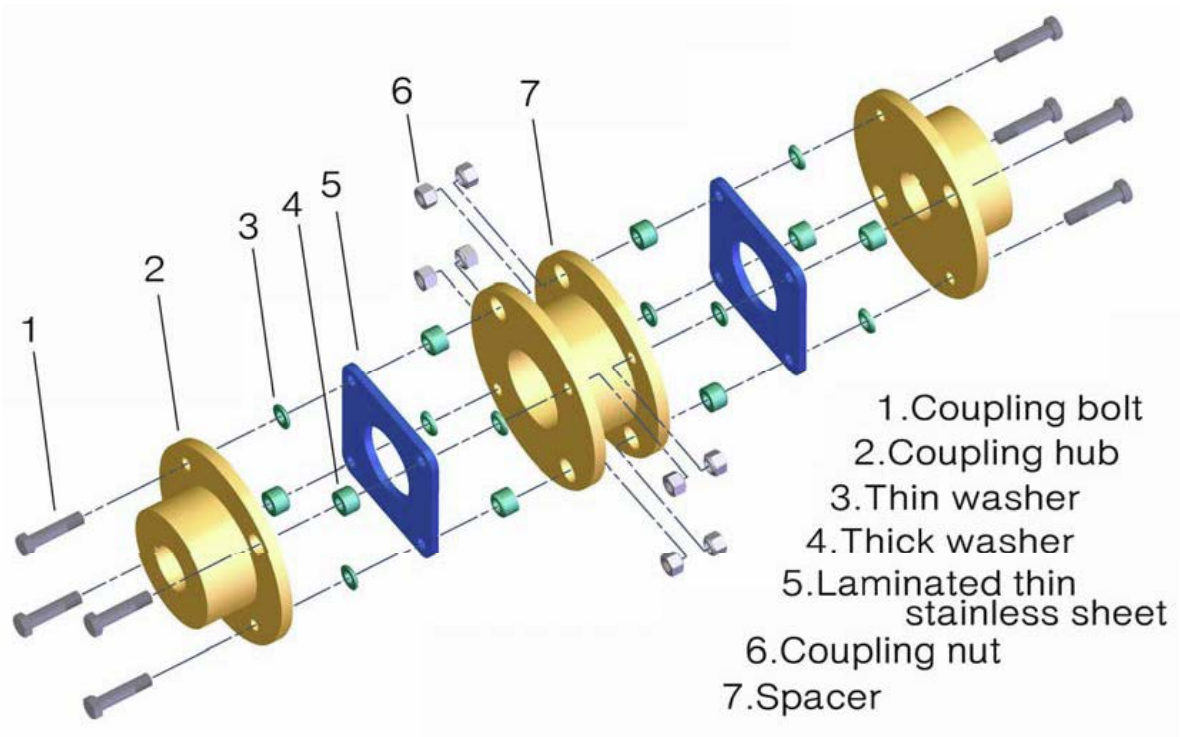

Fig. 3.10 Exploded view of Coupling

3．7．3 Pressure Gauges and Thermometers

Various types of pressure gauges and thermometers are available according to the control method employed. For example, one method uses an operation control by converting the pressure and temperature values to electronic signals and sent to the control circuit. Another method is a control method using pressure switches or thermo control switches while monitoring the operating status and the control valves

The following pressure gauges and thermometers are the minimum necessary, but other pressure gauges and thermometers may be required.

a) Oil pressure gauge b) Suction pressure gauge
c) Discharge pressure gauge d) Suction gas thermometer
e) Discharge gas thermometer

Pressure gauges and thermometers should be inspected and adjusted periodically using test instruments. If inspection and adjustment are not possible, replace the pressure gauges and thermometers with new ones periodically.

3．7．4 External Oil Filter

An external oil filter is used for the Model 6HK compressor together with the built-in internal oil filter to maintain the purity of the lubricant. The compressor main body is provided with a built-in oil filter (Mesh #200) to remove foreign particles entered the crankcase. The lubricant passed through the built-in oil filter is sucked by the oil pump, discharged from the oil pump, is separated into two different paths, one for the capacity control (unloader) mechanism and the other for the rotating portions of the compressor through the external oil filter (20μm).

The external oil filter is furnished with a fouling indicator at the top of the filter. The indicator shows green for normal, but if clogging or contamination by foreign matter is encountered, this is indicated by red as a result of significant increase in differential pressure before and after the oil filter. When the filter element is contaminated with foreign matter, renewal must be carried out as soon as possible.

When placing an order for the filter element, please do not forget to indicate the Model No. shown on the label attached to the oil filter.

Chapter 4 Parts Names and Functions

４．１ Crankcase (P/N1)

The crankcase is an essential pressure-tight structural body of the compressor and is designed to secure all component parts. The inside the crankcase consists of two different chambers, one for suction gas and the other for the crankshaft together with a discharge gas passage enclosed in the strong cast steel structural body.

Taking the characteristics of the Model HK compressor operating at higher pressure than conventional reciprocating compressors into consideration, the strength of the crankcase and related component parts are manufactured to withstand high operating pressure.

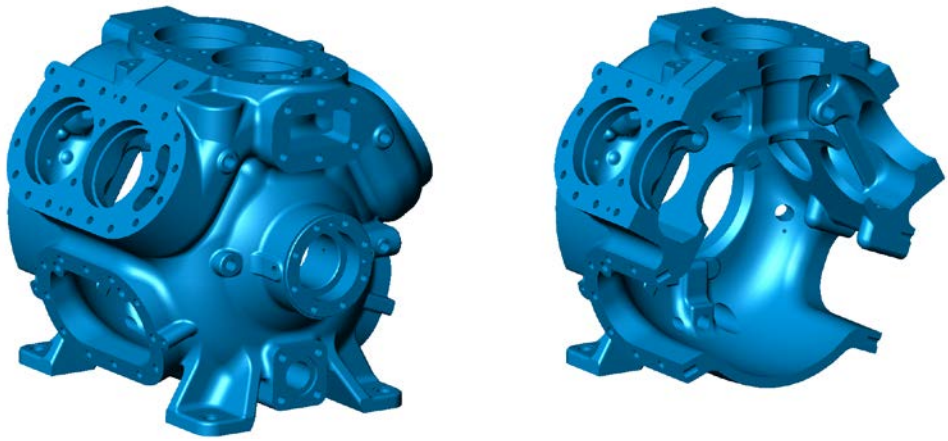

４．２ Crankshaft (P/N2)

The crankshaft is furnished with the crank pins branched from the main shaft to mount the connecting rods. The crank pins are located 180 deg. apart and 6 pistons are designed to reciprocate in turns equally once every one rotation of the crankshaft to minimize torque difference during the compression process.

The pistons reciprocate together with the connecting rod as the crankshaft rotates. The stroke of the piston is determined by the distance between the crank pin and the shaft portion of the crankshaft, with the stroke of the piston being equal to twice the offset distance (or equal to the distance between the two crank pins).

The crankshaft is bored with an internal oil passage, and lubrication oil sent from the oil pump is supplied to the bearing halves (P/N84), the main shaft at the shaft seal, mechanical shaft seal (P/N32), thrust washers (P/N29-1, P/N29-2), etc. through this oil passage.

To minimize the level of vibration due to imbalance of the connecting rods, pistons, etc., the crankshaft is also furnished with a balance weight.

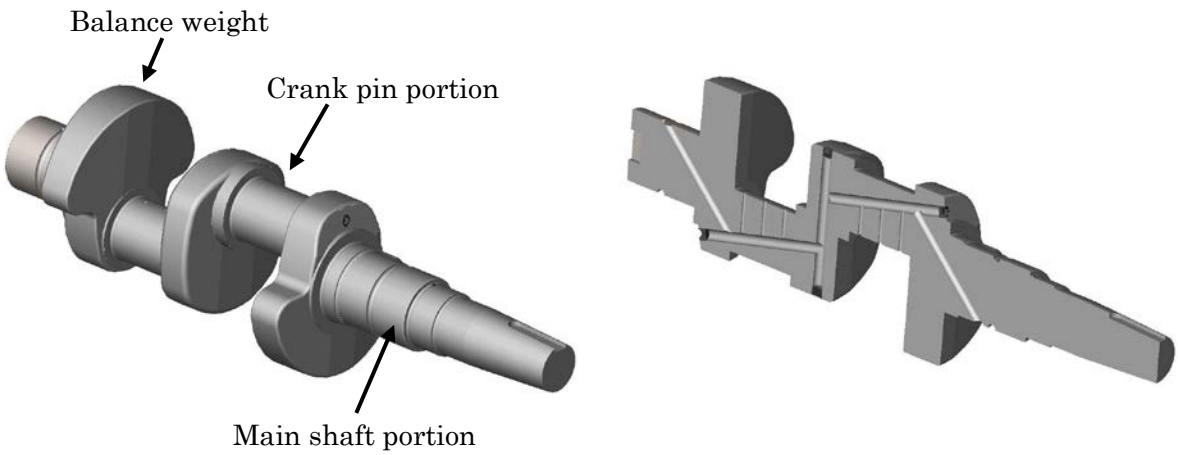

4. 3 Connecting Rod (P/N77)

The connecting rod which joints the crankshaft and piston is made of an aluminum alloy taking lower elasticity and maintenance accessibility into consideration.

The big end of the connecting rod is a split nut to hold the crank pin from the top and bottom. Roundness is finished after the half cut. Do not change the direction of assembly, otherwise seizure, abrasion, etc. may occur. The big end of the connecting rod is embossed with 3 signal numbers to indicate the proper combination. Confirm that the numbers are correct before and after assembly.

The big end of the connecting rod is furnished with a steel liner, consisting of bearing halves (P/N84).

4. 4 Piston (P/N85) and Piston Rings (P/N89, P/N90)

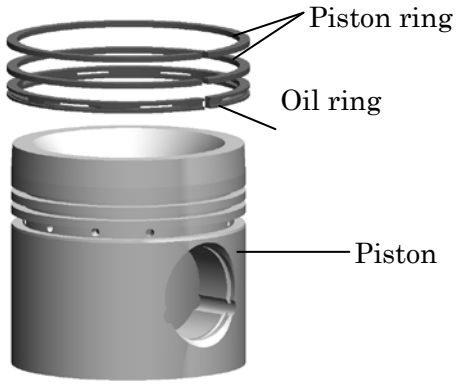

The piston reciprocates inside the cylinder sleeve by rotation of the crankshaft to compress the refrigerant gas. The material of the piston is an aluminum alloy, taking the low inertia force and defacement into consideration.

There is a slight gap between the piston and cylinder, from which refrigerant gas could leak. To prevent leakage, two piston rings are fitted to the piston. The piston is also furnished with one oil ring below the two piston rings to control the quantity of oil on the surface of the cylinder sleeve.

4. 5 Cylinder Sleeve (P/N61)

The cylinder sleeve is made of special high grade anti-friction cast metal with excellent oil retaining characteristics, because the piston and piston rings moves inside the cylinder sleeve while contacting the internal surface of the cylinder sleeve at extremely high speed. The internal surface of the cylinder sleeve is finished by honing.

The outer portion of the cylinder sleeve is finished to accept installation of the unload mechanism, lift pin and cam ring, etc. for capacity control. The top of the cylinder sleeve functions as a seal for the suction valve. Care must be taken to protect the sleeve from scarring during maintenance.

4. 6 Head Cover (P/N49 , 50) and Head Spring (P/N117)

The head cover is an essential component protecting the valves and various internal components and is designed for high pressure operating conditions. For a refrigerant with high discharge temperature such as ammonia, a water-cooled jacket type head cover is selected to cool down the head cover by supplying water and prevent overheating and burning.

The head cover also functions to secure the head springs. The head springs are installed as a protection mechanism to prevent the discharge plate valves, pistons, etc. from damage due to liquid compression inside the cylinder caused by of oil and liquid refrigerant entering the cylinder and instantaneously raising the internal pressure.

４．７ Hand-hole Cover (P/N45)

A hand-hole cover is fitted to the lower portion of the compressor crankcase to facilitate disassembly and reassembly.

The hand-hole cover is furnished with an oil sight glass.

４．８ Spacers (P/N34(L),35(R)) for Hand-hole Cover

Attaching these spacers to the hand-hole cover regulates oil consumption.

４．９ Suction Valve (P/N71) and Discharge Valve (P/N110)

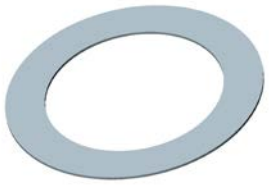

The suction valve and the discharge valve, also called the ring valve or plate valve, have excellent characteristics against wear and metal fatigue.

This ring-like valve can occupy the larger gas passage against the height of the lift and is suitable for operation at high revolution speed and for medium and large-scale compressors.

Both suction and discharge valves also serve as check valves, designed to open or close respectively at the suction and discharge stroke only. The suction and discharge springs function to close and secure the ring valves against the valve seat immediately at the end of each cycle.

４．１０ Oil Supply Pump and Oil Filter (P/N119)

A built-in oil supply pump fitted to the bearing housing is driven by the crankshaft. The oil supply pump is a gear pump and the suction side is furnished with an oil filter to prevent compressor damage due to foreign matter contamination. The discharge side of the oil pump is furnished with an external oil filter to remove the smaller foreign particles.

４．１１ Oil cooler

Lubrication oil is used in the Model HK compressor to lubricate and cool the rotating portions of the compressor. When the heat given off by the rotating portion and heat emission from the surface of the crankcase are equal, oil temperature becomes constant. Oil temperature changes according to the operating conditions, ambient temperature and the kind of refrigerant. Oil temperature is maintained at a comparatively high when the refrigerant is ammonia (NH_3). If the oil temperature becomes excessively high, oil film will not be generated on the bearings, leading to deterioration of the oil so in this case oil cooler is used for cooling.

４．１２ Bearing

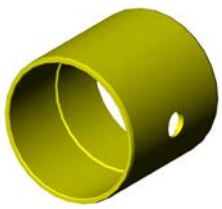

The main bearing portion of the crankshaft and bearing halves(P/N84U,L) of the big end of the connecting rod are made of soft bearing materials including gunmetal.

The shaft is raised somewhat by an oil film on the shaft and rotates with no contact between the shaft and the bearing, so there is no abrasion. If small foreign particles enter the oil and are sent to the bearing, the shaft can be abraded and scratched. If the crankshaft and bearing are hard against each other, the foreign particles will remain between the shaft and bearing, resulting in acceleration of abnormal abrasion. By using a soft bearing metal becomes buried in the material, protecting the crankshaft from abrasion.

４．１３ Shaft Seal (P/N32)

This open type reciprocating compressor is furnished with a shaft seal or the shaft portion extending outside the crankcase. The shaft seal consists of a ring rotating with the shaft, a stationary ring fitted in the shaft seal cover, an O-ring, etc. The surface of the shaft seal is finished by combining cast steel and carbon.

A thin oil film generated between the mirrors finished rotating ring and the stationary ring and a small amount of oil is exhausted outside the crankcase during operation.
Though the shaft seal is cooled by lubricating oil, if the oil flow is interrupted, seizure is unavoidable because the shaft seal rotating portion generates heat. Seizure, breakage or peeling of carbon within a short of time is possible. Should the compressor be left in stop status for an extended period of time, oil inside the seal box and refrigerant will leak out.

Chapter 5 Installation and Operation

In this chapter installation and operation on this compressor are described.

5．1 Compressor Unit Centering Work

DANGER

・Before commencing centering work for the compressor and the drive motor, turn off the main power supply and the control power supply switches. Special care must be taken to ensure that the power supply is never connected or turned on when working on the system. If energized during service work, the compressor may start up, posing a threat of electric shock or physical harm to anyone in the vicinity of the belt drive or shaft.

WARNING

・Special care must be taken when turning the power source On and Off to avoid electric shock.

CAUTION

・Centering work for the compressor and drive motor should always be carried out using the designated tools only. Use of inappropriate, worn or damaged tools may lead to serious injury.

The Model HK compressor incorporates a direct coupling (Foam flex type). The following instructions are for centering alignment work of the Foam flex coupling unit.

a . Securing the Hub

The distance between the compressor side hub end face and the motor side hub end face should be set to the specified dimension.

b . Centering work

1) Eccentricity (Refer to Fig. 5.1)

Eccentricity is determined by mounting a dial gauge indicator on the motor side hub with the sensor in contact with the driven side hub periphery. Determine the eccentricity value by rotating the motor side shaft.

Allowable Eccentricity limit: 0.05mm or less both for up/down and right/left sides (Relative Eccentricity: Less than 0.1mm).

2) Declination (Refer to Fig.5.2)

Shaft declination is measured using a dial gauge indicator as shown in Fig. 5.2. Attach the dial gauge indicator to the hub flange and measure the declination of the opposite side hub while turning the hub flange.

The allowable tolerance : 0.05mm or less per 100mm radius.

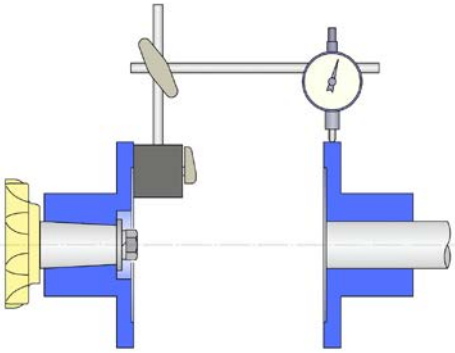

Fig.5.1 Shaft eccentricity

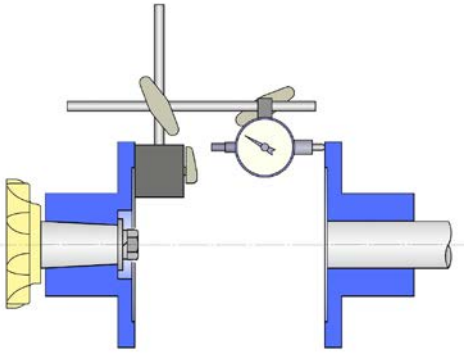

Fig.5.2 Shaft declination

c . Assembly of Coupling

Assemble the coupling referring to Fig. 3.10 “Exploded view of Coupling”. The coupling element can easily be assembled by screwing the coupling bolts.

Coupling bolt torque: 154Nm (1600kg/cm)

The convex face of the washer should face the flex element. When inserting the bolt, do not apply excessive force. The thicker washer can be inserted into the larger hole on the flange. All nylon nuts should be tightened to the specified torque value. There is no particular direction for inserting the coupling bolts, but insert from the side most convenient for servicing.

【Cautions during assembly work】

Inspection of eccentricity and declination should be carried out again 1~2 hours after starting operation, taking the service life of the coupling element into consideration. At this time retighten the bolts and nuts to the specified torque.

According to test results, the nylon nuts can be secured/ removed a maximum of 15 times, but it is preferable to renew them after ten times. If it is necessary to remove and refit a nylon nut more than 10 times, spare nuts should be procured.

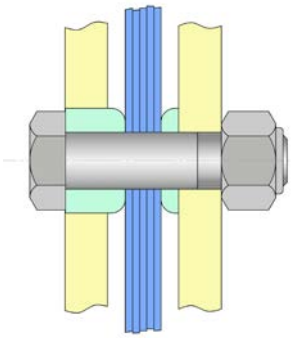

Fig.5.3 Assembly of Washer

5．2 Piping

DANGER

・Do not use oxygen or combustible gas for air-tight testing as there is a risk of explosion.

CAUTION

・Do not use CO_2 gas for air-tight testing of an ammonia (NH_3) compressor as there is the possibility of generation of ammonium carbonate, which is harmful to the system.

5．2．1 Cautions on Refrigerant Piping

a．The compressor, an essential component of refrigeration and air conditioning systems, consists of comparatively few rotating components. These components must be protected from foreign particle contamination. When piping work is carried out, extreme care should be taken to prevent rust and welding debris from remaining inside the piping.

b．When the compressor is shipped from the factory, it is usually charged with nitrogen gas as a rust prevention measure. The suction and discharge valves should never be opened until installation on site (especially for shipment outside Japan).

c．Moisture contamination of the piping system must be avoided, otherwise, unexpected problems may develop with the compressor after operation is commenced. Piping work should therefore be carried out under completely dry conditions.

d．Dust guard plates are fitted to the pipe joints of the compressor. These must be removed when the piping is connected to the compressor.

e．Refrigerant piping must be arranged properly so that any oil which enters the pipes is returned the compressor. If a trap is incorporated or the routing includes bends, care must be taken to ensure the necessary gas flow rate and oil return, or problems such as liquid flow back may develop.

5．2．2 Piping Work for Pressure Gauges and Protection Switches and Installation of Thermometers

Piping work between the compressor and the pressure gauges and protection switches should be carried out referring to Fig. 5.4, “Connecting port locations for Pressure.” The essential valves or connecting portions are indicated by appropriate labels showing use application. In case the piping system uses a small outer diameter of 6mm, special care must be taken to prevent clogging with welding butts, spatter, etc.

The discharge thermometer should be mounted on the discharge elbow or discharge piping line.

The oil thermometer should be mounted on the oil piping system after the oil filter or the oil cooler.

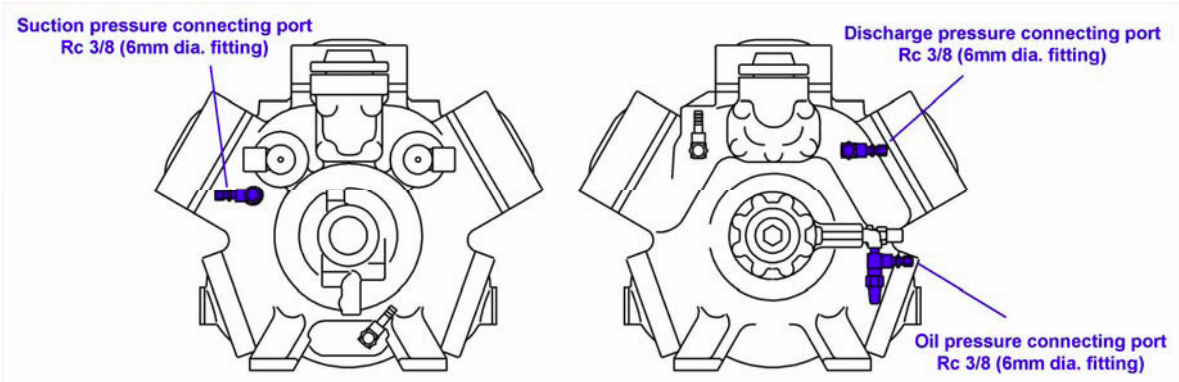

Fig. 5.4 Connecting port locations for pressure gauges

5．2．3 Protection Alarms (Protection Switches)

The surface temperature of the compressor crankcase stabilizes within a specific range during operation under normal conditions. If an abnormality develops within the compressor, unusual symptoms usually generate in advance.

Constant and proper management of the discharge gas temperature as well as oil temperature is essential in order to protect the compressor from major mechanical failure. The oil temperature and the discharge gas temperature are related to each other. Especially, abnormal symptoms are usually reflected in the discharge gas temperature at an early stage.

Also pressure throughout the system stabilizes within a specific range during operation under normal conditions. If any abnormal change in pressure is observed, the compressor must be stopped immediately and the cause determined in order to prevent accident or damage to the compressor.

The Model 6HK compressor is equipped with the following protection alarms (switches) to ensure that the pressure does not exceed normal levels. Protection alarms uses many controlling ways including utilizing protection switches and alarming in control circuit by measuring pressures.

The following instruments are usually mounted for this purpose.:

a) Oil pressure failure protection (OP)
b) Abnormal high-pressure cutout (HP)
c) Low pressure control (LP)

Regarding preset values, refer to the following table:

Function testing of these instruments should be carried out to confirm proper operation starting the system and should be repeated periodically.

[Caution] Function testing should be carried out using pressure tester to confirm whether the alarms and switches are functioning properly or not. Special care should be taken not to start operation when the control valves are closed.

	Functioning (ON)	Release (OFF)	Timer	restart
Oil pressure failure protection (abnormal low oil pressure) (OP)	Low pressure +0.10MPa	Low pressure +0.12MPa	30sec.	Manual reset
High pressure cutout (abnormal high pressure protection) (HP)	Below 5.6MPa*	—	Nil	Manual reset
Low pressure control (LP)	Varies according to refrigerant used or actual system			Automatic reset

*:The activation pressure of the high pressure cutout switch should be set somewhat lower than that of the safety valve blow off value. It is recommended that the set value for activation be determined taking the kind of refrigerant and system into consideration. In case of a system measuring pressure by electrical signal and issue alarms using the control circuit (such as a sequencer), it is also possible to use a pre-alarm system which activates prior to abnormal circumstance.

※ Pressures in the table are based on the gauge pressure.

[Caution] If the oil pressure failure protection (OP) or the high pressure cutout (HP) switch is actuated, restart after identifying and rectifying the cause.

When the compressor has a water-cooled head cover and water-cooled oil cooler, install a water failure alarm together with the pressure switch or flow switch on the cooling water circuit.

5．2．4 Oil Heater and Thermostatic Switch

The oil heater is a cartridge type sheath heater incorporating an insulated heating wire sealed in a pressure-tight stainless tube giving a maximum heat transfer.

The oil heater is installed to prevent the refrigerant from mixing the lubrication oil during operation stoppage and to prevent the refrigerant gas from condensing in the compressor crankcase. It is never used during normal operation but effective for operation stoppage only.

The thermostatic switch is mounted adjacent to or in the heater to allow temperature control.

If electricity is supplied to the heater and the thermostatic switch when they are not immersed in lubricant, the heater can overheat and burn out. Care must be taken to confirm the oil level before the heater and thermostatic switch are turned on.

5．2．5 External Oil Filter

Piping for the external oil filter should be carried out referring to Fig. 5.5 Oil Filter Piping. The lubrication oil flows from the left side bottom of the oil pump, passing through the oil filter (and passing through the oil cooler if necessary), and returning to the compressor crankcase through the right side bottom of the oil pump.

Piping work should be carried out while confirming the oil flow direction indicated on the main body of the oil filter. It is recommended that the service valves be installed before and behind the oil filter for the convenience of cleaning and removing foreign matter from the filter element, using the optional service valves with a small pressure loss. An appropriate countermeasure should be taken so that the service valves should not be closed during normal operation and stoppage operation.

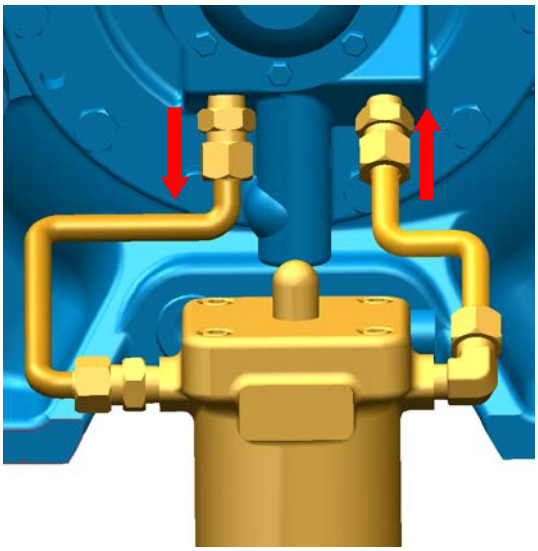

Fig. 5.5 Oil Filter Piping

5．2．6 Oil Separator

Oil mist is mixed in the refrigerant gas discharged from the compressor. Consequently, an oil separator is necessary to remove this oil from the refrigerant gas.

Various types of oil separator are available. Select the better efficiency of oil detachment for the installation.

Install a solenoid valve on the oil return valve of the oil separator to prevent flow back the high pressure gas into the compressor during operation stoppage. It may cause to remain lubrication oil in the compressor.

[Caution] There are two different oil return piping systems, one for returning oil inside the piping system which is equipped with the float, and the other for oil mixed with the refrigerant using a throttle. The connecting ports differ. Confirmation therefore is necessary, referring to the piping diagram.

5．2．7 Safety Valve

A safety valve is necessary to prevent from possible explosion due to excessively high pressure inside the compressor. The activation pressure of the safety valve should be set below the design pressure of the compressor. The discharge side safety valve should be mounted adjacent to the compressor before the service valve to actuate even though the compressor starts operation with stop valve (service valve) closed in error.

The outlet port of the safety valve should be treated according to the refrigerant used. If some of ammonia refrigerant is discharged into the atmosphere, it is poisonous, has a bad smell and is potentially dangerous. Should CO2 gas be released to the atmosphere without treatment, the refrigerant will be discharged together with the lubricant, resulting in environmental contamination. Releasing gas inside the machine room may lead to serious accident such as oxygen deficiency or other physical injury.

5．2．8 Cooling Water Piping System

If the compressor is fitted with a water-cooled oil cooler and water-cooled jacket head cover, the cooling water piping system should be connected from the oil cooler and the head cover in order.

[Caution] Do not branch the water piping system from the oil cooler to the head cover, or there will be an uncooled area due to pressure-loss and this area will be dangerous.

5．3 Precautions for Operation

DANGER

・Confirm the status of all valves before starting operation. If the compressor is started while the high pressure side discharge valve is closed, the compressor will explode so special care must be taken. If any valve connected to the control switch is left closed, the respective protection device will not be activated.
・The root valve of the safety valve should always be left fully open, except when testing and inspection of the safety valve.
・Mount the coupling guard before starting operation, otherwise death or serious injury may result due to entrapment in the rotating portion.
・For adjustment of the control valves or inspection during operation of the compressor, special care must be taken to assure safety. There are various risks associated with operation of the compressor such as death, physical injury, scarring, electric shock, burn, etc.

5．3．1 Initial Start-up

The refrigeration equipment will provide maximum performance for a long period of service after installation. Precautions during initial start-up are, therefore, essential in assuring the durability and performance of the compressor. During the first 24 hours of initial operation, foreign objects such as dust, scale, rust or sand in the piping system will be carried into the compressor by refrigerant gas. Very fine dust which cannot be removed by the suction filter becomes entrained in the oil causing accelerated wear and eventual failure. While various foreign contaminants are sucked into the compressor over a long period of time after initial start-up, most accumulated foreign matter is sucked into the compressor just after starting initial operation. Determine the presence of foreign matter by checking the suction filter and the oil color.

Since deterioration of the oil in the crankcase is the probable result of system contamination, the system can be regarded as clean if the oil remains clear for an extended period of operation. On the other hand, if the oil turns dark or muddy brown, contamination by foreign matter in the piping system is the most probable cause. In such a case the oil should be replaced as soon as possible and keep away from foreign matter in the friction portion of the compressor. Especially care must be taken the following points.

a． Filter Cleaning and Oil Change

・If the refrigeration cycle of the packaged unit remains clean, it is not necessary to clean the oil filter.

・If the external oil filter element is stained, replace with a new one. It is not reusable even if it is cleaned.

・The casing of the external oil filter is furnished with a stain indicator, which changes color from green to red to indicate the flow of oil passing through (pressure-loss). When found stain on the filter element during carrying out disassembly or inspection, surely replace the filter element with a new one as well as when the color of the stain indicator changes.

b． Overheat or Abnormal Noise

To carry out cleaning of the oil filter and suction filter, treatment of refrigerant and disassembly of the compressor are required.

Frequency	Oil change and oil filter cleaning and	External oil filter inspection and cleaning	Suction filter Cleaning
After charging refrigerant and initial start-up	●	●	▲
After test running	●	●	●
100hrs. of operation after initial start-up	●	●	●
300hrs. of operation after	●	●	●

initial start-up			
700hrs. of operation after initial start-up	●	●	●
Every 1,000hrs of operation	●	●	●
Note In addition to the above guidelines, if any symptoms of a problem are observed such as dirty oil, filter logging, etc., replace the oil and clean the filters.			

※ ●･･･necessarily ▲･･･inspection and cleaning are recommended.

5．3．2 Operational Records and Inspection Items

Records of refrigeration equipment operating conditions should be maintained using a logbook. Accurate records are essential not only for ensuring safe, effective operation of the equipment but also for tracing the exact cause of a problem that might be encountered so that proper and appropriate countermeasures can be implemented.

The operational records can be utilized as the judgment standard for renewal of the equipment, cleaning the heat exchanger, cooling water quality control, maintenance of equipment, renewal of component parts, etc.

The operation records should include the following data, inspections, supervision records, running hours, detections, etc.

a． Suction Pressure and Temperature

In theory, the ideal suction pressure is saturation pressure equivalent to the evaporative temperature. In practice, however, there is a small pressure drop (loss) due to piping resistance. If a large pressure drop is observed, an appropriate countermeasures should be taken, e.g., clogging of the suction filter, contamination of the heat exchanger, etc. A drop in suction pressure can be confirmed by checking the pressure change after start up and comparing the pressure levels between the initial start up and thereafter.

The suction pressure, the evaporative pressure and the temperature are determined when the equipment is designed.

If the compressor is operated under conditions outside the specified operating parameters, for example, when under a specified value, refrigeration capacity will be drastically reduced, resulting in poor operating conditions. On the other hand, if the compressor is operated at higher than the specified value, refrigeration capacity will increase but the power requirement will also increase, resulting in motor overload. Maintaining the appropriate suction pressure is essential to ensuring satisfactory compressor capacity for a long period of time.

Usually, the most suitable suction temperature is the saturation temperature equivalent to the suction pressure plus 0~5℃ (that is, a superheat degree of 0~5℃), assuming that there is no liquid flow back to the compressor at this superheat value. Super heater should be installed if needed.

b． Discharge Pressure and Discharge Temperature

The criteria for discharge pressure can be simply stated as “Condensing pressure + Piping resistance.” When the discharge pressure rises excessively, various problems may develop. These include as drop in refrigeration capacity, motor overload or malfunction and, most importantly, dangerous conditions due to abnormally high pressure.

The cause of an abnormally high compressor discharge pressure include a shortage of cooling water and a failure in cooling tower in water condensers, and a fan failure, grime on the fin surface and fin dropping due to corrosion in air condensers. In addition causes stemmed from refrigerant are contamination of the suction gas by non-condensable gas (air) and decreasing the condensation area etc. in both cooling methods. Since the above factors change from moment by moment, a check of the operating records can facilitate determination of the cause.

On the other hand, a drop in the discharge pressure (condensing pressure) can lead to favorable results such as an increase in refrigeration capacity, a reduction in motor power consumption, etc. In any case, if the power consumption of the water pump, the circulation rate of the cooling water, etc. are neglected, economical operation cannot be achieved.

Discharge temperatures differ according to the kind of refrigerant, compression ratios and the superheat degree of the suction gas, but care must be taken never to exceed the 135℃ level. If the discharge temperature is excessively high, the cause may be an excessively high degree of suction gas superheat or recompression superheat due to discharge or suction plate valve damage.

c． Oil supply pressure

The most suitable oil pressure is equivalent to the suction pressure +0.2~0.3MPa (2~3kg/cm2). Adjust the oil pressure using the oil pressure control valve to achieve the above pressure level. The oil pressure control valve is provided with a built-in pressure control mechanism to maintain the pressure difference between the oil supply pressure and the compressor suction pressure constant, thus the pressure difference can be maintained constant even after the suction pressure is changed.

If a drop in oil supply pressure (pressure difference) is observed with no handling of the control valve, it is considered that there is some abnormal circumstance encountered such as oil filter clogging, trouble with the oil pump, oil foaming inside the crankcase due to a drop in suction pressure or liquid refrigerant flow back, oil leakage due to abnormal wear of the rolling portion, etc.

Care must be taken to monitor the oil level, color, status of oil filter, contamination with foreign matter, oil supply pressure, etc. during operation.

d. Oil Quantity (Oil Level)

The oil level in the crankcase can be determined by monitoring the oil level gauge. Confirm that the oil level is within the specified range. Usually, the oil level in the crankcase gradually drops during initial start-up. If the oil level is not visible in the level gauge, replenish oil.

If refrigerant is dissolved in the oil including liquid flow-back and oil remaining when the compressor stopping under normal condition. Care must be taken because the apparent oil level will be higher than the actual level.

e. Oil Temperature

The oil temperature will vary according to operating conditions

When employed ammonia (NH_3) for refrigerant, the oil temperature should not exceed the higher limit of 70℃ in order to avoid liquid condensation in crank case according to operating conditions.

When employed carbon dioxide (CO_2) for refrigerant, the oil temperature should not below the lower limit of +30℃.

f. Oil Deterioration

Clear, transparent oil similar in appearance to fresh new oil is desirable. Generally, oil deterioration can be determined by monitoring the change in color, i.e., brown to black and finally to a muddy appearance, which is a sign of contamination by foreign solids. In this case replace the lubricating oil with new oil immediately.

The lubrication oil should always be maintained in excellent condition to assure normal operation of the compressor for a long period of time. Oil deterioration or unclean oil leads abnormal defacement of the rotating portions of the compressor, resulting in operation stoppage in the long run. Continuous inspection and periodic renewal of lubrication oil is, therefore, essential.

g. Oil leakage from Shaft Seal Portion

Oil leakage is determined by monitoring the oil drip from the shaft seal portion. Leakage of oil by 3 mL/h is considered normal and is regarded as the factory standard for shipment.

h. Power Transmission

For a direct coupling, confirm that there is no abnormal vibration due to looseness of the bolts and nuts. Generally, a rhythmical operating sound should be heard from the compressor.

When inspecting for looseness of the bolts and nuts directly, do not forget to turn off or disconnect the main power supply to the motor and the control power supply, and lock out the erroneous starting operation during inspection.

Confirm that there is no looseness and be sure the coupling guard is not rickety.

i. Electric Motor

Confirm that the electric current and voltage remain steady within the ranges recommended by the motor manufacturer. The temperature of the bearing casing should also be remain within the normal parameters given by the manufacture.

j. Others

※ Temperature of Refrigerant Piping (during normal operation)

The temperature of the liquid refrigerant piping (piping line between the receiver and the expansion valve) should be somewhat lower than the refrigerant condensing temperature.

If the temperature of the liquid refrigerant piping line is much higher than the condensing temperature, it is considered that refrigerant gas is flowing through the line instead of liquid refrigerant due to a shortage of refrigerant. On the contrary, if the refrigerant piping line temperature is much lower than the condensing temperature, it is considered that liquid refrigerant is expanding inside the piping system. This may be due to clogging of the dryer, the liquid refrigerant supply solenoid valve, filter, a closed valve, etc. Should any cold portion be found midway along the piping system, it is considered that there is some

obstruction existing inside the piping line, resulting in generation of pressure-loss due to the throttle effect.

※ Liquid Hammer and Oil Hammer

If a large quantity of oil or non-gasified refrigerant is sucked into a compressor cylinder, a clanking sound will be heard and the discharge piping will becomes frosted (instantaneous drop in temperature). This commonly called "liquid-hammer" or "oil-hammer" and is very dangerous, posing the threat of a serious accident and causing a failure in the compressor.

If this phenomenon is encountered during operation, adjust the expansion valve after throttling the suction valve to control the quantity of refrigerant flow into the cylinders. When the sound of liquid-hammer ceases and the discharge piping becomes warm again, open the suction valve slowly to return to normal operation.

In case of oil-hammer, a similar phenomenon occurs when the oil level in the crankcase is too high. In this case, the excess oil should be drained off.

※ Refrigerant Leakage

The refrigeration system incorporates a considerable number of crotch joints, flare joints and flanges, etc. Periodic inspection and retightening to the proper torque value is, therefore, essential. Bolts securing components under high pressure, high temperature and vibration become loose over time, resulting in refrigerant leakage. The valve glands also need to be inspected and retightened periodically.

５．３．３ Decline in Compressor Performance

A significant decline in compressor performance may result from refrigerant leakage from the discharge or suction plate valves or the piston rings due to breakage or excessive wear, clogging of the suction filter, superheat of the suction gas, etc. Failures stemmed from other components such as shortage of refrigerant, a drop in the performance of the heat exchanger, and refrigerant leakage from the oil return line of the oil separator are also potential causes of a decline in compressor performance.

５．３．４ Oil Consumption

Lubricating oil mixed in the refrigerant gas passes the piston and is discharged from the compressor, flowing into the receiver through the oil separator and condenser.

Lubricating oil separated by the oil separator is returned to the compressor crankcase, and a portion of the oil is transferred to the evaporator from the receiver. In case of a dry-type evaporator, lubricating oil coming from the receiver is returned to the compressor crankcase together with evaporated refrigerant gas. In case of a flooded-type evaporator, the return of oil in the evaporator is difficult, so it is necessary to prepare the proper oil return system taking the weight of lubricating oil and liquid refrigerant into consideration.

Oil consumption is rather large during initial start-up operation but it stabilizes after a certain period of time and the quantity of oil returned from the evaporator and the actual oil consumption reach a near balance as apparent oil consumption (requiring additional oil charging) decreases. When the start/stop frequency of the compressor is high or instantaneous drop in suction drop in suction pressure and abnormal operation such as liquid back is experienced, the lubricating oil is prone to generate foam and be sucked into the compressor cylinders, resulting in a considerable increase in oil consumption. Care must be taken if abnormal operation is experienced.

Chapter 6 Maintenance and Inspection

DANGER

・Before undertaking inspection and maintenance work, turn off the main power supply and the control power supply switches. Special care must be taken to ensure that the power supply is never connected or turned on when working on the compressor. If energized during the aforesaid service work, the compressor may start, posing a threat of electric shock or physical harm to anyone in the vicinity of the rotating shaft. Also, near current-carrying areas, there is a high risk of electric shock.
・For adjustment of the control valves or inspection during operation of the compressor, special care must be taken to assure safety. There are various risks associated with operation of the compressor such as death, physical injury, scarring, electric shock, etc.

WARNING

・Before commencing inspection or maintenance service work, turn off the power supply to the heater and the relative equipment. Special care must be taken that the power supply is not connected or turned on during the aforesaid service, posing the threat of electric shock, physical injury, scarring, electric shock, etc.

・Special care must be taken when turning the power source on and off to avoid the electric shock.

６．１ Daily Inspection

The following should be inspected every 2~3 hours and inspection data should be recorded in the operations logbook.

ａ）Suction pressure　ｂ）Discharge pressure　ｃ）Oil supply pressure　ｄ）Suction temperature　ｅ）Discharge temperature　ｆ）Liquid level in receiver and oil level in crankcase　ｇ）Oil temperature　ｈ）Color of indicator for external oil filter　ｉ）Any abnormal sound or vibration

ｊ）Others

※Confirm whether motor current is normal or not.
※Confirm that the condenser cooling water flow is sufficient.
※In case the compressor is fitted with an oil cooler and a water-cooled type jacket head cover, confirm that cooling water flow is sufficient. Also confirm that there is no water leakage from hoses and no looseness of the hose bands.
※Determine whether water content exists inside the system or not.
※Confirm temperature inside the machine room.

Also, record the following data on the operations logbook

１）Replenishing Lubrication oil　２）Recharging Refrigerant　３）Cleaning of filters
４）Details of special treatments carried out during maintenance.　５）Total running hours

６．２ Monthly inspection

１）Confirm that the coupling is securely fastened.
２）Inspection and calibration of pressure gauges and thermometers
３）Confirm that the protection switches are functioning satisfactorily.
※Confirmation for pressure switches should be carried out using a pressure tester. Do not raise or try to change the discharge pressure for testing.
４）Confirm that oil leakage from the shaft seal is within allowable limits.
５）Carry out inspection to confirm that the bite type joints, flare joints, flanges and valve glands are free from leakage of gas or lubrication oil.

6）Check the cooling water system and carry out cleaning (when a water-cooled condenser is utilized)

Water stain or scale may be formed in the cooling water system depending on the quality of the cooling water. In this case periodic cleaning of the cooling water system for the cooling tower and the condenser is essential.

6．3 Periodic Inspection

Periodic inspection should be carried out every year or within 8,000 hours after the previous inspection.

6．3．1 First Periodic Inspection (Overhaul)

First periodic inspection should be carried out every year or within 8,000 hours after test-run.

Remove the shaft seal cover, the head cover and the hand hole cover, and draw out the pistons and connecting rods. If no abnormal phenomenon are observed, the crankshaft and the bearing housing need not be removed.

（1）Replace the plate valves and plate valve springs with new ones.

（2）Renew the bearing halves of the connecting rods.

（3）Check the shaft seal assembly. If any abnormality is found, replace the seal assembly with a new one.

（4）Replace the piston rings and oil control rings with new ones.

（5）Replace the gaskets and the O-rings with new ones respectively.

（6）Inspect the connecting rods.

（7）Inspect the piston pins. If any abnormal wear is found, replace the piston pins with new ones.

（8）Inspect the cylinder sleeves and the pistons.

（9）Inspect the crankshaft pins. portion

（１０）Clean and inspect the filters for damages

（１１）Clean the inside of the crankcase.

（１２）Replace the lubricating oil with new one.

（１３）Replace jacket hoses with new ones. (when a water-cooled head cover is utilized)

（１４）Others

※）Apply grease to the driving motor (refer to the instruction manual of the motor). If there is no specific instruction, it is recommended that grease be supplied every 1,000hours of operation.

6．3．2 Second Periodic Inspection (Overhaul)

Second periodic inspection should be carried out every two year or within 16,000 hours after the previous inspection. In addition to the items listed for the primary periodic inspection, the following additional inspections should be carried out. Remove the crankshaft and the bearing housing.

（1）Inspect the main bushing. If abnormal wear or damage is found, replace the main bushing with a new one.

（2）Inspect the thrust roller bearing. If abnormal wear or damage is found, replace the thrust roller bearing with a new one.

（3）Inspect the thrust washer. If any abnormality is found, replace the thrust washer with a new one.

（4）Inspect the crankshaft. If abnormal wear is found, replace the crankshaft with a new one.

（5）Check all other parts. If any abnormality is found, replace parts as necessary.

6．3．3 Filter Inspection

（1）Refer to Section 5.3. "Precautions during operation", and Section 5.3.1-a, “Filter Cleaning and Oil Change.”

（2）Clean the dryer filter and the water piping filter.

6．3．4 Pressure Gauges (or Pressure Sensors)

Calibration adjustment should be carried out every six months referring to a standard pressure

gauge. If an error exceeding the minimum graduation unit is found, replace the pressure gauge with a new one.

[Cautions]

(1) Frequency (times) of periodic inspection is determined by model, type of refrigerant, revolution speed, operating conditions, status of equipment, type of oil, etc. Mayekawa therefore does not guarantee free replacement parts if the components experience wear earlier than specified period.

(2) Usually, expendable parts for the HK series compressor are to be replaced during periodic inspection (overhaul).

Chapter 7 Lubrication Oil

7. 1 Functions and Characteristics

Lubrication oil is used for lubricating the surfaces of friction parts of a compressor, preventing abnormal wear and cooling compressor parts.

The essential characteristics of lubrication oil are:

a . Maintaining appropriate viscosity under the respective temperature and pressure conditions within the specified operating ranges.

b . Maintaining appropriate fluidity even under low temperature conditions (within the applicable temperature range of the refrigeration equipment).

c . Chemical stability with no influence on metal or rubber such as corrosive deterioration or chemical change.

d . Free of wax separation from the lubricating oil or hardening under low temperature conditions.

e . Free from development of sludge and carbonization of the oil even under high temperature conditions.

f . Moisture-free.

g . Maintaining sufficient lubricous characteristics, etc.

7. 2 Selection of Lubrication Oil

a . Maintaining the viscosity of the lubrication oil is essential when supplying oil to the surfaces of the moving parts of the compressor. In the case of a refrigeration system using lubrication oil including a considerable amount of refrigerant (inter-soluble oil), the oil viscosity is prone to decreases considerably. It is, therefore, recommended to use oil classified as ISO-VG32 or equivalent when operating with refrigerant-mixed oil.

b . Consider oil circulation throughout the entire refrigeration system. The lubrication oil is circulated while lubricating and cooling down all moving portions of the compressor and the greater part of the oil is retuned to the oil reservoir inside the compressor crankcase. Nevertheless, a portion of the lubrication oil is discharged together with the refrigerant gas. The majority of lubrication oil discharged from the compressor is trapped by the oil separator and returned to compressor crankcase but some is transferred to the condenser and the evaporator. The compressor lubrication oil require sufficient fluidity and stability within the refrigerating equipment even under different temperature conditions.

7. 3 When Changing into Different Brand's Oil

When changing from the current brand to another, unexpected problems may occur as a result of mixing two kinds of oil. Care should be taken, therefore, when changing oil brands.

a . If the new and oid oils are produced by different manufacturers, ask both the manufacturers for possible problems that result from the change of oil. Also when changing from one type of oil to another, both of which are made by the same manufacturer, confirm the suitability of the new oil.

b . There should be no problem changing the viscosity grade of the oil from the same brand, if the oil viscosity grade is suitable for the respective operation.

7. 4 Lubrication Oil Replenishment

The oil level in the compressor decreases gradually when the system is operated continuously. Replenishing oil should be carried out when the oil level remains visible from the sight glass.

a . Stop the operation of compressor and lower the pressure inside of crankcase to the nearly vacuum(approx. □ 0.026MPa or □ 20cmHg).

b . From the oil drain valve on a compressor draw back oil into the compressor gradually.

c . Or replenish oil using an oil pump.

d . Close the oil supply/drain valve securely after supplying the required amount of oil.

[Cautions]
Special care should be taken to prevent air and moisture entering the compressor when supplying oil.

・Only fresh clean oil from a sealed container should be used.

・Oil should be supplied gradually to the compressor in order to prevent foaming in the crankcase.

・Compressor lubrication oil should be stored under air-tight conditions in order to prevent moist air contamination.

7．5 Lubrication Oil Brands

The oil brand differs according to the type of refrigerant. For details, contact any of the Mayekawa offices or sales/service centers

Chapter 8 Disassembly

DANGER

・Before commencing overhaul and maintenance work on the compressor, turn off the main motor power supply and the control power supply switch. Special care must be taken to ensure that the power supply is never connected or turned on when working on the system. If energized during service work, the compressor may start up, posing a threat of electric shock or physical harm to anyone in the vicinity of the rotating shaft.

WARNING

・Before commencing overhaul and maintenance work, turn off the main motor power supply, the control power supply and the heater switch. If energized during service work, there is a risk of electric shock, burns or other physical harm.

・Special care must be taken when turning the power source On and Off to avoid electric shock.

8．1 Preparations for Disassembly

DANGER

・Before undertaking disassembly of the compressor, remove the refrigerant from inside the compressor crankcase and confirm that the internal pressure is equal to the atmospheric pressure. If high pressure refrigerant gas or oil remains inside the crankcase, there is a possible of blow off during disassembly, posing a danger of explosion, suffocation, fainting, poisoning, etc.

・If the refrigerant is an irritant or poisonous type, neutralize the refrigerant using nitrogen or dry air to reduce the density as much as possible. Care must be taken when removing covers, etc. Do not face the gas outlet port when opening, taking the risk of absorbing gas, poisoning or fainting, etc. into consideration.

・Should a considerable amount of refrigerant be exhausted inside a closed space such as the machine room, it can lead to suffocation or poisoning. Countermeasures for ventilation and refreshment of air inside the closed room are essential.

8．1．1 Recovering the Refrigerant

If refrigerant is discharged into the atmosphere improperly, it will have damaging effect on the environment such as foul odor and toxicity from ammonia (NH_3) refrigerant, a global warming effect from carbon dioxide (CO_2) refrigerant, potential explosion and fire from combustible gases, etc. If a lot of the refrigerant is released inside the closed machine room on the other hand, there is a risk of suffocation or poisoning. Regardless of the kind of refrigerant used, when disassembling a compressor, proper disposal is essential and make sure that refrigerant released to the open air should be controlled at a minimal level.

a． Close all the valves including suction stop valves, discharge stop valve and oil return valve for oil separator and remove the compressor only (except for the gate valves for the pressure gauges).

b． Disposal of refrigerant differs according to the kind of refrigerant. In case of ammonia (NH_3) refrigerant, recover the refrigerant as above or neutralize the refrigerant in water before disposal. In case of carbon dioxide (CO_2) refrigerant, use a recovery machine. When carrying out recovery or neutralization work, a special neutralizing agent, special knowledge and experience are required. Please contact any of the Mayekawa offices or sales/service centers.

8．1．2 Cautions on Disassembly

CAUTION

- Always use the regular specified hand tool kit only for compressor disassembly and assembly work. Use of inappropriate, worn or damaged tools may lead to serious injury.
- Use the maintenance hand tools only after fully understanding utilization and familiarization with the characteristics thereof.
- Prepare safety shoes, safety goggles, gas mask and other proper safety wear. Use these as necessary.
- Spare parts are covered with oil to prevent rusting and are prone to slipping when handled. Care must be taken when handling spare parts to avoid physical injury.
- Ensure sufficient spare parts to carry out the maintenance work. Care must be taken not to place spare parts or wiring cable carelessly on the floor as this poses a hazard.
- Always keep the floor clean. If the floor is stained with oil, etc., it poses a risk of causing falls and slips. Wipe up all stains and foreign matter immediately.
- Keep hand tools clean during the service work. Oil fowled tools are pone to drop and slip, it may cause physical injury. Dirty tools can leave harmful residue in the compressor, leading to serious malfunction and damage during operation.

a . When removing component parts, care must be taken to avoid scarring, bending or other damages
b . After removal, place the disassembled parts on a clean worktable in order.
c . When washing spare parts, use light oil or fine washing oil. Compressor lubrication oil can also be utilized as a detergent by warming to around 40~50℃. (Special care must be taken to prevent fire)
d . After washing spare parts, dry completely using the air pressure, a sponge or clean white cloth, then coat with new lubrication oil. Do not use cloth that easily sheds fibers.
e . When the cylinder assembly is disassembled, place all parts for each cylinder in order. Special care must be taken with parts of the connecting rods. Do not mix with others as the combination of connecting rod and rod cap differs and is not interchangeable.
f . Locking bolts should be placed in order according to use positions.

8．2 Lubrication Oil Scavenging

After refrigerant gas recovery from the compressor is completed, lubrication oil inside the compressor should be drained.

Connect a pipe or a hose to the oil supply/drain valve located on the right side below the oil pump and drain the oil into a container of sufficient size. Nitrogen gas or dried air can be used to raise pressure to around 0.1MPa to facilitate removing oil. Do not forget to remove the gas and return pressure inside the compressor to atmospheric pressure.

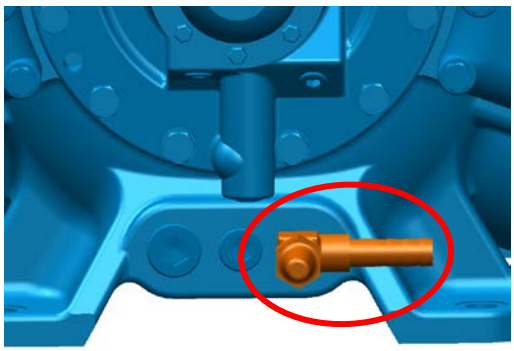

Fig.8.1 Oil Supply/Drain Valve

8．3 Disassembly of Coupling

Remove the coupling spacer and pull off the coupling flanges (hub) using a pulley remover. Both the crankshaft and the coupling hubs are tapered and can be removed easily.

8．4 Head Cover (P/N49, 50) Removing

8．4．1 Removing Jacket Cover (P/N53)

※Only for water-cooled type head cover (In case of air-cooled type, proceed to 8.4.2)

a．In case of water-cooled head cover, remove the jacket hose first.
Before removing the head cover confirm and record the number, place and the mounting direction of the head cover. If the place or the direction of the head cover is changed on disassembly, reassembly of head cover and mounting of the water hose will be impossible.

b．Remove all bolts, and take off the jacket cover.
※ When taking off the jacket cover, water remaining inside the jacket may spill out. Care should be taken that the water does not enter into crankcase.

8．4．2 Removing Head Cover (P/N50, 49)

Net weight of Head Cover: Approx. 15kg

a．First remove the center head cover in order to prevent scarring and damage of the head cover and the seat portion of crankcase, and to prevent foreign matter entry into particles into the crankcase.

b．Remove the upper bolts first, then mount a safety bolt.(Refer to Fig.8.3)
※ The safety bolt can easily be prepared using a longer one than the locking bolt by cutting down the top of the bolt a little. A fully threaded bolt(M12) can also be used as a safety bolt.

c．Loosen the remaining bolts and remove all bolts so that the head cover is pushed up slightly from the crankcase by head springs.

d．The head springs (P/N117) are fixed into grooves in the discharge valve cages (P/N109), but it is possible for them to slip out from the groove and fall. Remove the head cover while taking care to prevent the head springs slipping out of the grooves.

e．Finally remove the head springs.

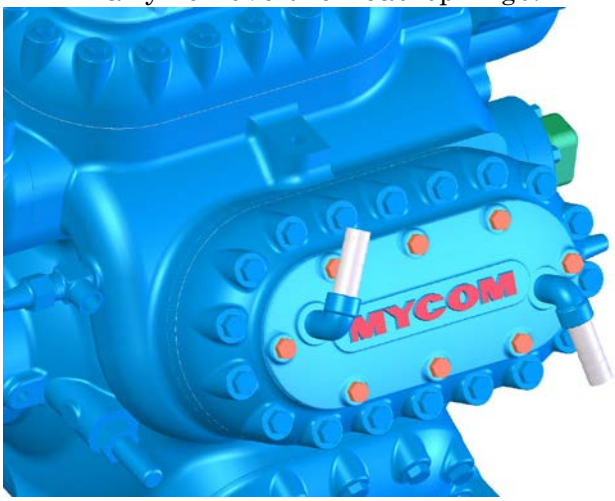

Fig.8.2 Head Cover, Water-cooled type (P/N50)

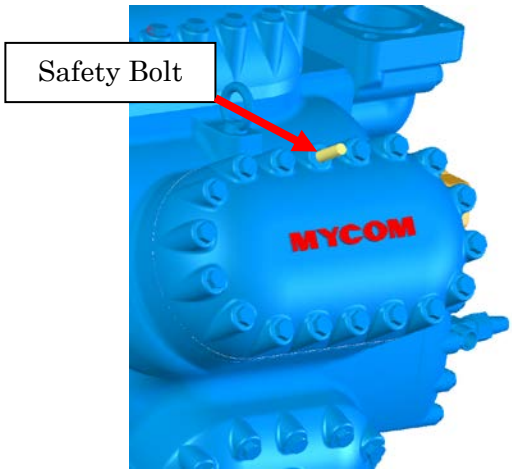

Fig.8.3 Head Cover, Air-cooled type (P/N49)

8．5 Discharge Valve Assembly and Discharge Valve Plate (P/N110)

8．5．1 Discharge Valve Assembly (i.e., D.V. Cage)

Fig.8.4 Removing D.V. Cage

a．The discharge valve (plate valve) is fitted in the discharge valve cage assembly (D.V. Cage) and positioned by the discharge valve caged guide (P/N74).

b．Raise the discharge valve cage upward in parallel with the discharge valve cage guide. It is difficult to remove it diagonally

c．Even when the discharge valve cage guide is not removed, disassembly work is still possible. If it is necessary to remove the discharge valve cage guide, remove bolts and pull off the cage along with the positioning pin (P/N75-1).

d．The top of the valve plate (P/N110) functions as an external valve seat for the discharge valve after the discharge valve cage is removed. Care must be taken to keep the surface free of damage.

e．The discharge valve seat (P/N111) is mounted on the discharge valve cage using three locking bolts (P/N112). Bend back the claws of the locking washers, then remove the locking bolts. The discharge vale seat is positioned using a parallel pin. The discharge valve seat (P/N111) may be stuck to the discharge valve cage (109) but can be removed by turning a little. When the discharge valve seat is removed, the discharge valve (plate valve) is detached. The discharge valve springs (P/N116) are mounted in the spring holes of the discharge valve cage (P/N109). Remove the discharge valve springs by pulling out. When it is difficult to remove, pull out with rotating in the direction of rotation.

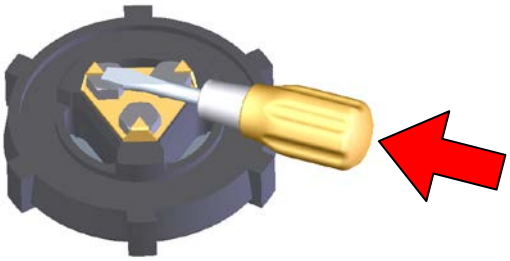

a) Bending back the locking claws

b) Removing Locking Bolts (P/N112)

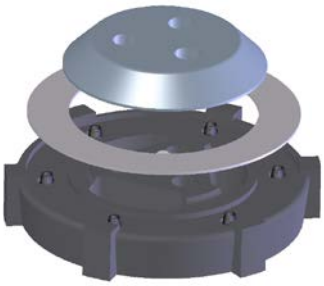

c) Removing Valve Seat(P/N111) and Plate Valve

d) Removing Discharge Valve Springs (P/N116)

Fig.8.5 Disassembly of Discharge Valve Assembly

8．5．2 Valve Plate (P/N73)

Weight:Approx.6kg. (including the cage guide(P/N74))

a． The valve plate is fixed to the crankcase with two positioning pins(P/N73-1,73-2) at the center part and one positioning pin near discharge port as shown in Fig.4.6 in addition to head cover locking bolts (P/N52). The valve plate is set to the crankcase (P/N1) by two pins

b． Pull up the valve plate vertically from the mounting surface.

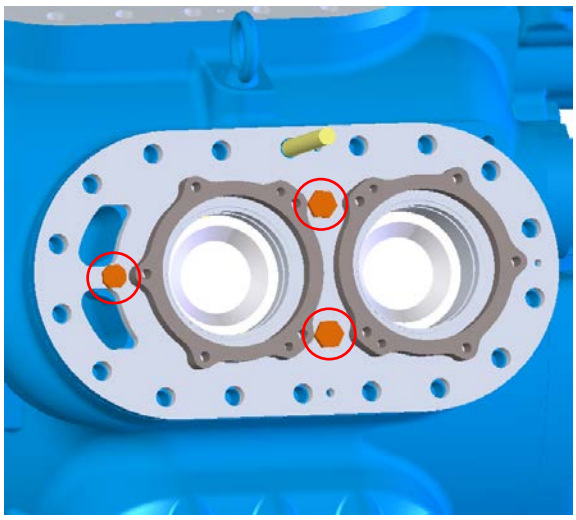

Fig.8.6 Removing Valve Plate

8．6 Hand-hole Cover (P/N45)

Net Weight of Hand-hole Cover：Approx. 6kg
Net Weight of Spacer for Hand-hole Cover: Approx. 3kg

a．Remove upper bolts first and replace with safety bolts.

b． Remove all remaining bolts. When removing the last bolt, care must be taken while supporting the cover by hand to prevent it falling on the floor.

When removing the hand-hole cover or the spacer from the crankcase, oil remaining inside will spill out. Place an oil drain pan below the hand-hole cover to catch the oil.

If the hand-hole cover gasket sticks to the crankcase, tap the cover with a plastic or copper hammer or mallet.

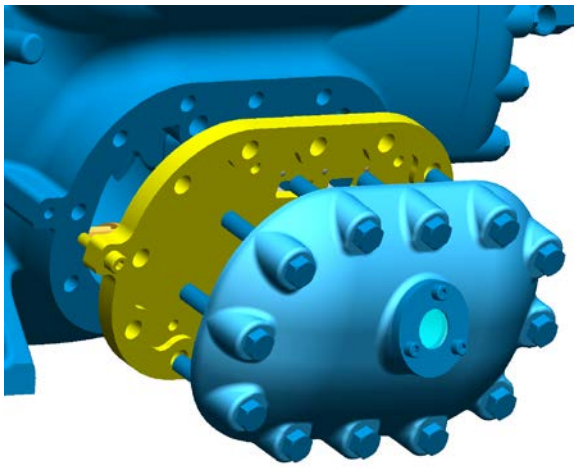

Fig.8.7 Removing Hand-hole Cover (P/N45)

c． The spacer for hand-hole cover is attached by two bolts separately from hand-hole cover.

d． The oil sight glass (P/N164) is mounted on the hand-hole cover using three bolts (P/N167). Remove these three bolts, and pull off the sight glass.

８．７ Cylinder Assembly (including Cylinder Sleeve, Piston and Connecting Rod, etc.)

Net Weight of assembly：4kg

８．７．１ Drawing out Cylinder Assembly

a . The width of the connecting rod big end is larger than the diameter of the cylinder sleeve (P/N61). The connecting rod (P/N77) should, therefore, be removed from the crankcase together with the cylinder sleeve and the piston (P/N 85) as an assembly.

b . First turn the crankshaft until the piston is positioned at bottom dead center of the cylinder which is being removed. When turning the crankshaft, the cylinder mated with the piston goes up together and it is possible for it to slip out from the crankcase. Hold down the cylinder sleeve when turning crankshaft. The remaining cylinders can be secured from lifting up by temporarily locking the valve plate.

c . Remove the nuts (P/N80) of the connecting rod bolts (P/N78) in order, then remove the big end rod cap. Care must be taken not to lose the washer (P/N79) and nuts (P/N80).

d . Push the cylinder up by hand from the hand hole of the crankcase, so the cylinder comes free of the crankcase. Hold the edge of the cylinder sleeve by a hand and pull out the assembly being careful not to let the connecting rod touch the crankcase.

e . Remove all remaining cylinder assemblies following the same procedure. All cylinder assemblies removed from the crankcase should be stored in correct order for reassembly. All caps, bolts and nuts, and washers should be grouped with their respective cylinder assemblies.

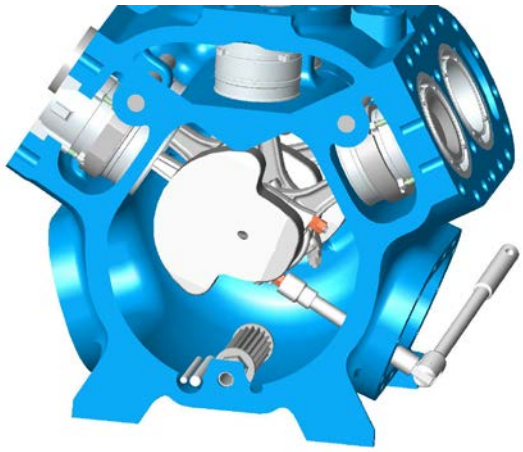

Fig.8.8 Removing lock nut

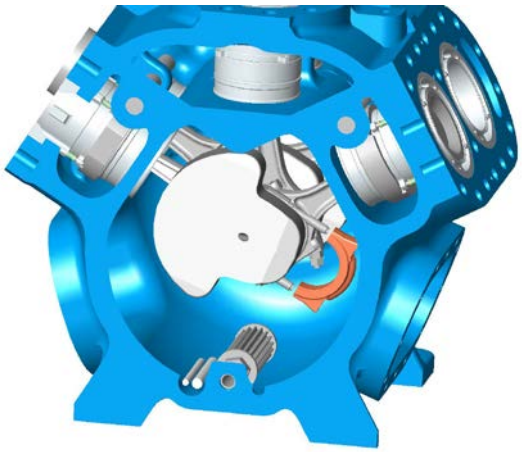

Fig.8.9 Removing Rod Cap

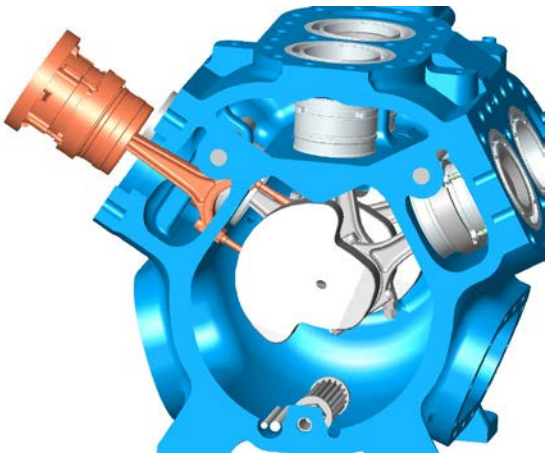

Fig.8.10 Removing Cylinder Assembly

８．７．２ Piston (P/N85) and Connecting Rod (P/N77) Removal

a . First the connecting rod retainer bolts (P/N78) should be drawn out. After removing the bolts from the big end, place the cylinder assembly on a work table cushioned by a rubber sheet or clean cloth with the cylinder seat (flared end) facing downward.

b . Holding the cylinder sleeve with one hand, draw out the piston while supporting the connecting rod big end with the other hand.
When the cylinder assembly is placed on an air-tight surface like a rubber sheet, it may be difficult to draw out the piston because of internal vacuum. Turn the assembly slightly to let in air to facilitate removal.

8．7．3 Cylinder Sleeve (P/N61)

a． It is unnecessary to disassemble the cylinder sleeve unless the sleeve itself or the cam rings (P/N62 & 63) must be replaced. If the retaining ring (P/N65) fitted in the lower groove on the sleeve is removed, the cam ring will drop off.

b． Two different cam rings are used. One is left downward slanted and the other is right downward slanted. The mounting positions of these cam rings are fixed, so care must be taken to place the right mounting position, otherwise the unloader mechanism may not function.

c． Remove the unloader lift pin stop ring (E-ring) (P/N70) from the lift pin (P/N68) and the lifet pin is easily come out of the cylinder sleeve. Care must be taken not to lose the springs (P/N69) and E-rings (P/N70).

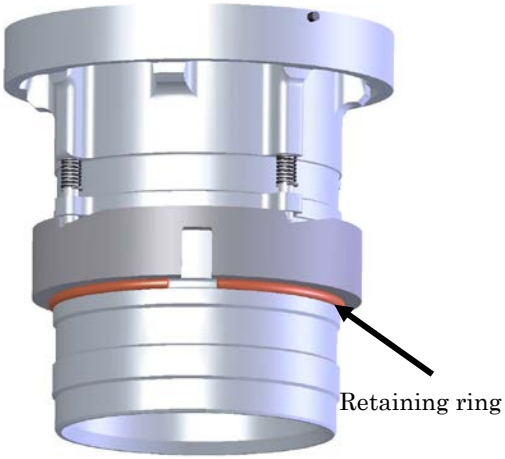

a) Removing Retaining Ring(P/N65)

b) Removing Cam Rings (P/N62L, 63R)

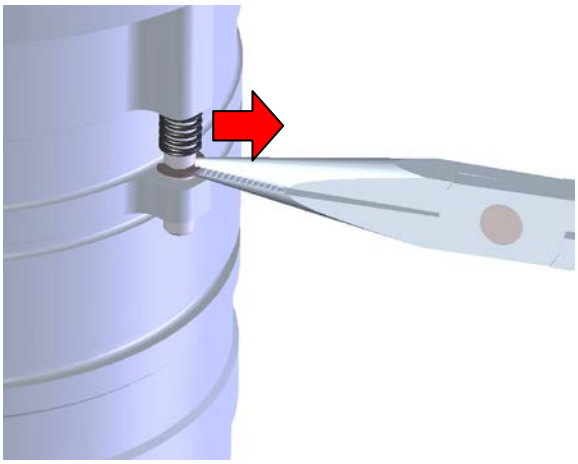

c) Removing E-Ring (P/N70)

d) Removing Lift Pins (P/N68)

Fig.8.11 Disassembly of Unloader Mechanism

8．7．4 Piston (P/N85) and Connecting Rod (P/N77)

a．Position the piston with the crown facing down and the rod end facing up. Remove the piston pin lock spring (P/N87) using a pair of snap ring pliers.

b．Holding the piston and connecting rod securely, push the piston pin (P/N86) out to separate the piston and connecting rod.

c．Do not remove the connecting rod large end bearing halves (P/N84) unless replacement is necessary. The small end of the connecting rod is furnished with a wrapped bearing bushing as bearing function. Wrapping bearing bushing replacement needs special tools for it.

d．Each set of connecting rod large end and cap is engraved with mating marks. Be sure to keep the rod and cap pairs together.

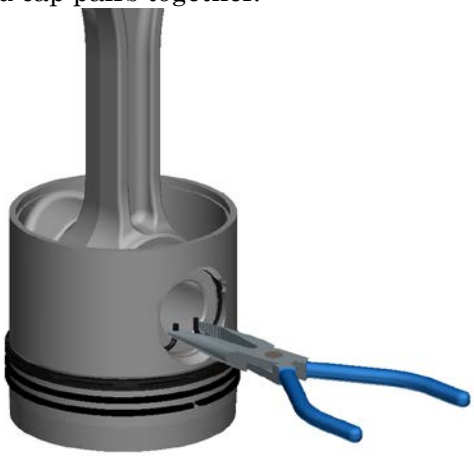

a) Removing Lock Spring

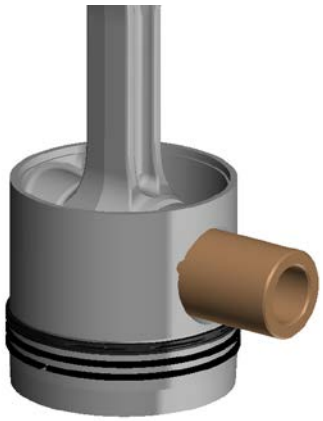

b) Drawing out Piston Pin

Fig.8.12 Removing Piston Pin

8．7．5 Piston Rings (P/N89, 90)

a．Do not remove the piston rings unless replacement is necessary.

b．Utilize hooks or a pair of piston ring pliers or bindings to expand the ring end gap on the same plane to facilitate removal of the ring. (Refer to Fig.8.13)

c．Torsional expansion of the ring may lead to deformation of the ring, the cylinder touching position is changed and it can be a cause of the excessive oil consumption in cylinder when reassembled. Also too much of deformation leads to breakage of th ring. Especially the 3rd ring is easy to be broken so remove it carefully.

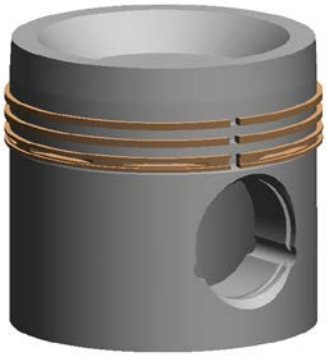

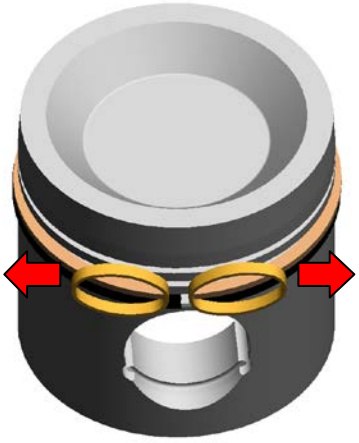

Fig.8.13 Removing Piston Rings (P/N89&90)

8．8 Unloader Mechanism Disassembly

a． Remove the coil portion of the unloader solenoid valve (remove the nut which secures the coil) and take off the unloader cover bolts. Since the cover will move outward due to the pressure of the unloader spring, be sure to keep a firm grip on the cover.

b． Remove the unloader cover so that the unloader piston, push rod and spring can easily be removed. The length of each push rod differs according to the position of the cylinders mounted on. Keep a record of the cylinder number and the unloader cover number as well as the direction.

c． The locking ring and the washers of the unloader push rods should not be removed but left in place.

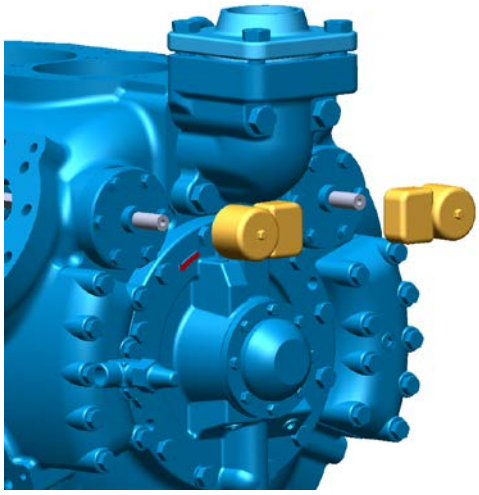

Fig.8.14 Removing Solenoid valve Coil

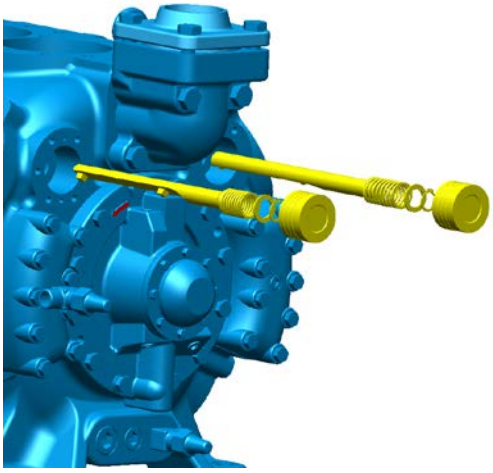

Fig.8.15 Removing Unloader Mechanism

8．9 Shaft Seal (P/N32) Disassembly

8．9．1 Removing Shaft Seal Cover (P/N26)

a． Before removing the shaft seal cover, place an oil pan under the cover to catch any oil remaining inside.

b． Loosen all shaft seal cover locking bolts (P/N28). If the gasket (P/N27) is not stuck to the crankcase, a small gap is created between the seal cover and the casing by the spring power of the shaft seal. Except for two opposite locking bolts, remove all remaining bolts, then remove the remaining two bolts evenly while securing the seal cover.

c． In case the shaft seal cover is stuck to the crankcase because the gasket is stuck to the casing, turn the cover by hands left and right while loosening the bolts. If the cover does not move at all, insert a minus driver into the crevice and pry off evenly.

d． Draw out the shaft seal cover along to the crankshaft axis.

e． The shaft seal cover is furnished with a floating seat made of carbon together with the O-ring. The floating seat can easily be removed by inserting a finger between the seat and the seal cover, but care must be taken because the seat can easily be broken.

Fig.8.16 Removing Shaft Seal Cover

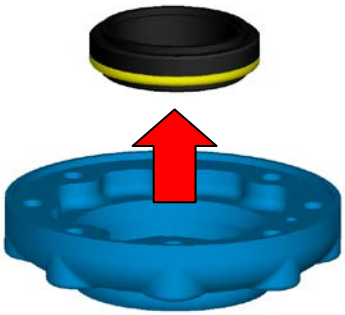

Fig.8.17 Removing Floating Seat

８．９．２ Removing Shaft Seal assembly (P/N32)

a . Remove the shaft seal cover (P/N26) to expose the mechanical seal assembly (P/N32). The mechanical shaft seal assembly is connected to the shaft by a spring retainer attached to two set screws. It consists of a seal ring, O-ring, drive collar and seal spring.

b . Grasp the shaft seal assembly with both hands and draw out while securing the seal collar positioned inside.

c . Dismantle the seal assembly, arranging the parts in order and store with care. The seal ring frictional face should be protected to prevent damage.

８．１０Bearing Housing (P/N8)

８．１０．１ Removing Bearing Housing (P/N8)

Net weight: Approx. 15kg

※The clearance of the crankshaft in the thrust direction should be measured before removing the bearing housing (P/N8).

Push the shaft in the crankcase close to the seal side or the pump side and measure the clearance with a thickness gauge inserted between the opposite shaft end face and the thrust washer.

Alternatively, push the shaft to the pump side and measure the distance moved in the thrust direction using a dial gauge mounted on the end of the crankshaft. (the standard clearance : 0.4 to 1.15mm)

a . Remove all bearing housing locking bolts (P/N10-1 & 10-2). Two tap holes are located on the flange portion of the bearing housing (refer to Fig. 8.19-a) below). Insert and screw two locking bolts (P/N10-1, 10-2) into the tap holes to press off the bearing housing.

b . After pushing the bearing housing off somewhat with the tap hole bolts, grasp the bearing housing with both hands and pull off. The shaft fitting for the bearing inside the bearing housing may sometimes come out together with the housing. Secure the crankshaft by hand through the hand hole or from the seal side to prevent the crankshaft being pulled out together with the bearing housing.

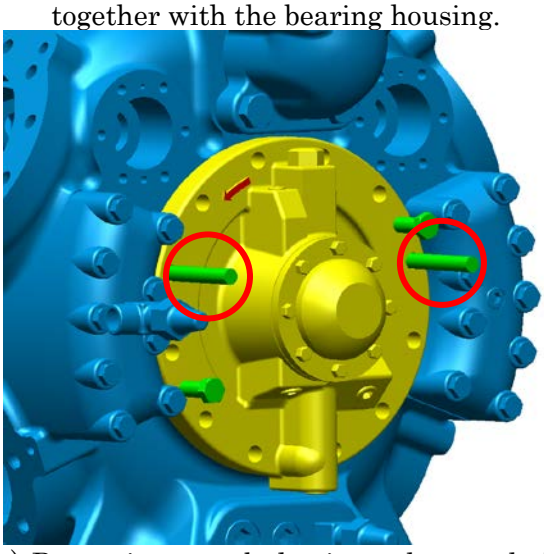

a) Resetting two bolts into the tap holes

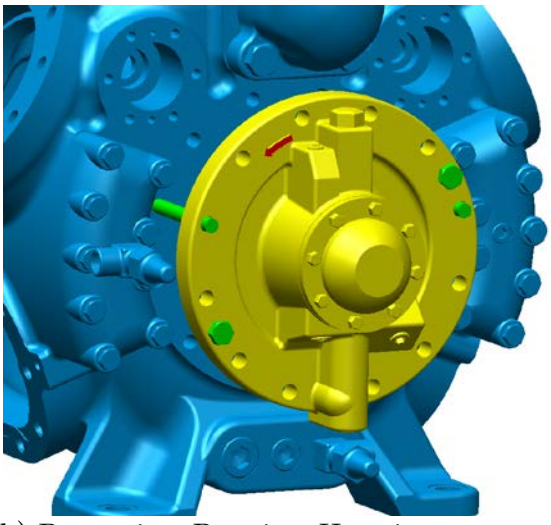

b) Removing Bearing Housing

Fig.8.19 Removing Bearing Housing

８．１０．２ Pump side Main Bushing (P/N12) and Thrust Washer (P/N29-2)

a． The main bushing is press fitted into the hole in the main bearing housing. In appearance it resembles a thinly coiled bushing. The main bushing replacement should be achieved by the replacement of the bearing housing assembly. It is usually unnecessary to remove the bearing housing assembly unless replacement is required.

b． The thrust washer (P/N29-2) is a circular-shaped metal plate with a backing sheet. It is fitted to the thrust face of the bearing housing with a lock pin.

c． When replacing the thrust washer, push out the metal with a fine driver inserting the top of it between the thrust washer and the housing.

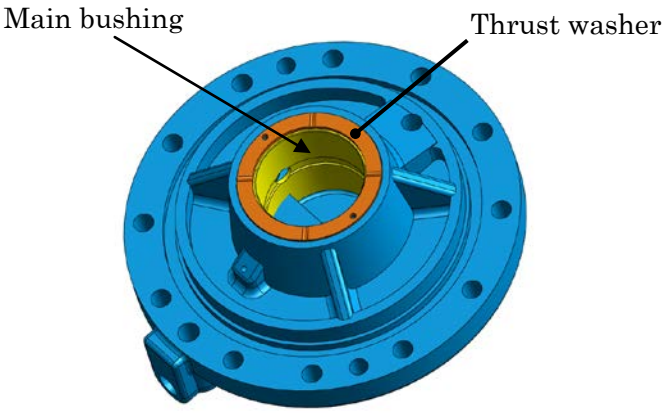

Fig.8.20 Main Bushing (P/N12) and Thrust Washer (P/N29)

８．１０．３ Oil Pump

The oil pump assembly is mounted on the bearing housing (8). If the pump shaft does not rotate smoothly or is experiencing a drop in performance, replace the complete bearing housing assembly

８．１１ Crankshaft (2)

Net Weight：Approx. 30kg

a． After removing the bearing housing (P/N8), the crankshaft is held in place only by the main bushing (P/N12) on the shaft seal side. With an assistant to support both ends of the crankshaft, lift and draw out the shaft until the bearing housing side balance weight can be rested on the bearing housing mounting flange.

b． Draw out the crankshaft gradually as shown in Fig.8.21

c． After the crankshaft has been removed, place it on a cloth or rubber sheet to prevent damage to the bearing journals and the mechanical seal mounting portion.

Fig.8.21 Removing the Crankshaft(P/N2)

８．１２ Seal side Main Bushing (P/N12) and Thrust Roller Bearing (P/N29-1)

a . The seal side main bushing (main bearing) is press fitted into the crankcase. When replacement is required, utilize the specified tools only.

b . Remove the washer of roller bearing that is fixed to the cavity of the crankcase.

８．１３ Oil Filter (P/N119)

The oil filter is mounted inside the crankcase with a hex head nipple (P/N118).

Remove the oil filter together with the nipple. Since the wire material of the filter element is rather fragile, do not apply an excessive force when removing it.

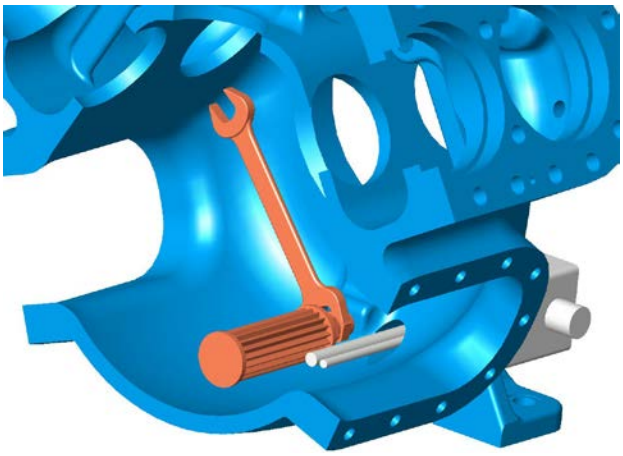

Fig.8.22 Removing Oil Filter

８．１４ Suction Filter (P/N154)

Net Weight of Suction elbow：Approx. 17kg

The suction filter is mounted inside the suction elbow (P/N175). The suction filter must be cleaned during periodic inspection. Special care must be taken to confirm that there is no breakage of the filter or the joint portion.

Remove the bolts of the piping side flange and the locking bolts for the crankcase and remove the suction elbow, then remove the suction filter from the elbow.

Fig.8.23 Removing Suction Filter

８．１５ External Oil Filter

。Mark the oil flow direction at the top of the flange to prevent error during reassembly.

Remove the tightening bolt (Cap Bolt) located on the upper portion and pull off the flange. Inside the flange you may find an accumulation of foreign matter together with lubrication oil. Open the drain plug at the bottom to drain the oil and foreign matter. Thereafter clean the inside using kerosene.

The filter element can be easily removed by pulling up on the mounting portion of the filter. If dirt or deformation is found, replace the filter element with a new one.

８．１６ Oil Pressure Regulating Valve (P/N22)

The oil pressure regulating valve does not normally need to be disassembled. If removed or replaced with a new one, carry out adjustment of the regulating valve.

Chapter 9 Reassembly

※ All parts disassembled from the compressor should be repaired or replaced according to the inspection and replacement standards given later in this manual. Reassembly work is essentially carried out in the reverse order of disassembly. When ordering spare and replacement parts, specify the number of the part indicated in the exploded view and parts list, the name of the part, the model and the serial number of the compressor.

9．1 Cautions on Reassembly

DANGER

・Do not use oxygen or combustible gas for air-tight testing as there is a risk of explosion.

CAUTION

・Always uses the regular specified hand tool kit only for compressor disassembly and assembly work. Use of inappropriate, worn or damaged tools may lead to serious injury.

・Use the maintenance hand tools only after fully understanding utilization and familiarization with the characteristics thereof.

・Prepare safety shoes, safety goggles, gas mask and other proper safety wear. Use these as necessary.

・Spare parts are covered with oil to prevent rusting and are prone to slipping when handled. Care must be taken when handling spare parts to avoid physical injury.

・Ensure sufficient space to carry out the maintenance work. Care must be taken not to place spare parts or wiring cable carelessly on the floor as this poses a hazard.

・Always keep the floor clean. If the floor is stained with oil, etc., it poses a risk of causing falls. Wipe up all stains and foreign matter immediately.

・Keep hand tools clean during a work. Use of dirty tools may cause slipping and physical injury. Dirty tools can leave harmful residue in the compressor, leading to serious malfunction and damage during operation.

・Do not use CO_2 gas for air-tight testing of an ammonia（NH_3）compressor as there is the possibility of generation of ammonium carbonate, which is harmful to the system.

a . When replacing a part, confirm that the new part is in fact the correct one before starting reassembly.

b . Clean all parts with kerosene or mechanic's solvent. Remove any visible rust due to standing and degraded oil attached to a part with fine emery paper. Remove the locking plug on the crankshaft and clean inside the oil passage. Remount the locking plug immediately after cleaning to avoid loss. (Cleaning of the seal tape is not necessary).

c. Prepare an oiler containing fresh lubrication oil and apply the oil to all friction surfaces just before carrying out reassembly.

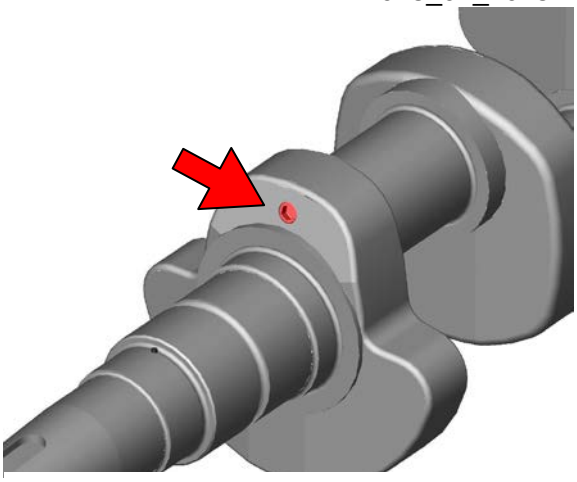

Fig.9.1 Locking Plug on Crankshaft

d . Dry all washed parts with compressed air or wipe them using a cotton or non-woven sheet. Do not use cloth materials such as wool or synthetic fiber as these do not absorb oil well and may leave fibers on the parts, causing problems later.

Make sure that the oil passages in the parts are not closed by applying air or using a viewing light.

e . The gaskets used between mating surfaces should be coated with lubrication oil on both sides before installation in order to assure airtight sealing. When replacing a gasket, scrape all old gasket residues off on the mating surfaces before mounting the new gasket.

f . All hand tools used during disassembly should be cleaned before commencing reassembly work.

g . When mounting a cover, care must be taken to ensure that the gasket is properly positioned, especially the oil port locations. Be careful to avoid blocking oil ports because it impedes oil supply causing a failure

h . Fasten all bolts lightly then retighten to the specified torque in a crisscross pattern.

9 . 2 Crankcase(P/N1) Reassembly

a . Check the main bushing (P/N12) and install the washers of roller bearing (P/N29-1), then apply lubrication oil to all portions. (The bore diameter of the washer is 77mm, smaller than that of rotating ring by 2mm)

b . On replacement of main bushing do not drive in, but press-fit using the special main bushing specific press-fitting tool. After press-fitting the main bushing, confirm that the oil hole of the bushing and the oil hole on the crankcase are aligned. The oil hole in the crankcase is located at the right of oil pressure regulating valve observed from the shaft seal side. Even though the two oil holes do not mate perfectly, no functional problem will occur. If the two holes do not mate mostly or completely, draw out and press-fit once again.

c . Mount the oil filter while turning the hex head nipple. Do not apply pressure on the filter element otherwise it may deform.

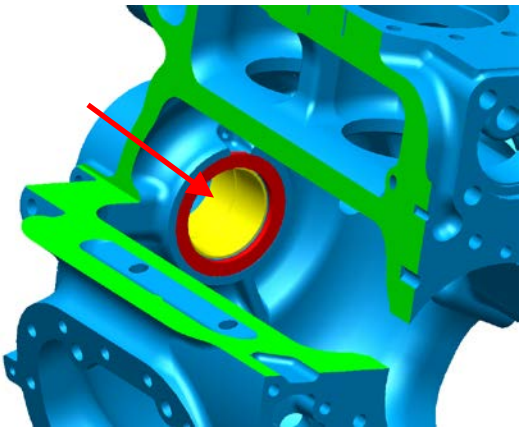

Fig.9.2 Mounting Washer of roller bearing

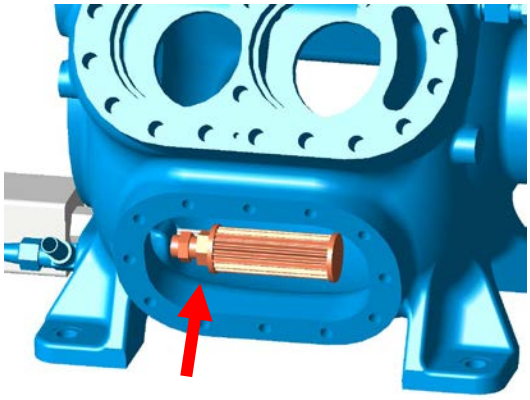

Fig.9.3 Mounting Oil Filter

9．3 Crankshaft(P/N2)

a． Set the washer and roller (P/N29-1) onto the thrust bearing mounting portion of the crankshaft. Apply lubrication oil to roller bearing and main shaft.

b． Place the crankshaft balance weight on the flange portion of the bearing housing.

c． Insert the crankshaft into the crankcase until the center arm rests on the bearing housing flange. When carrying out this work, be careful not to damage the main bushing with the shaft end as it enters the main bushing.

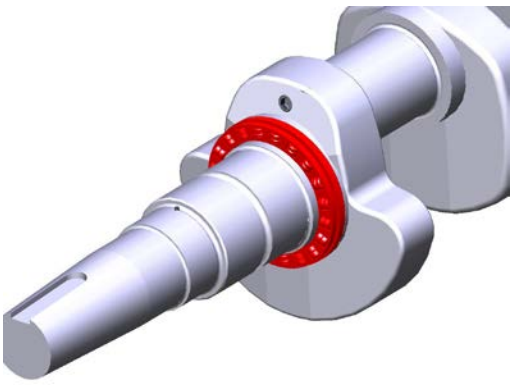

Fig.9.4 Mounting Thrust Roller Bearing

d． When the balance weight of the crankshaft on the oil pump side reaches the flange portion, the crankshaft bushing portion is ready to accept the main bushing. The crankshaft end is extruded to the shaft seal side. Insert the shaft into the main bushing while supporting both ends of the crankshaft. Move the crankshaft parallel to the shaft core. Be careful not to drop the roller bearing.

e． Push the shaft in until it contacts the thrust face.

f． Locate the groove for the oil pump in a vertical position by rotating the crankshaft.

Fig.9.5 Crankshaft Reassembly

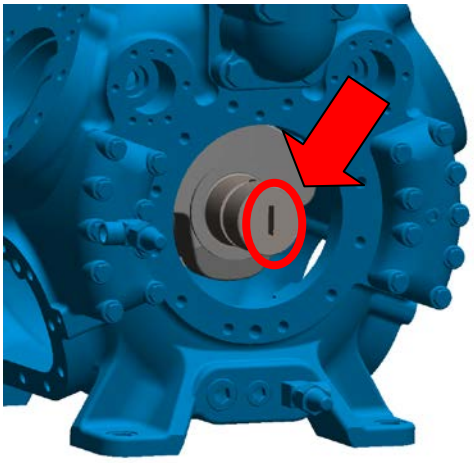

Fig.9.6 Crankshaft Groove Position

9．4 Bearing Housing

a． Since main bushing and oil pump constitute bearing housing assembly, when they are replaced, the bearing housing assembly should be replaced.

b． Fit the thrust washer (P/N29) on the bearing housing (P/N8) to mate with the thrust washer locking pin (P/N13).

c． Position the oil pump vertically to mate with the crankshaft end.

d． Apply lubrication oil to the journal portion of the shaft and the oil supply hole in the crankshaft.

e． Mount the bearing housing gasket (P/N9) on the surface of the housing (P/N8). Be careful to avoid blocking the oil hole.

f． Mount the main bushing (P/N12) on the crankshaft (P/N2) and then, raising the bearing housing slightly, push the crankshaft into the crankcase.

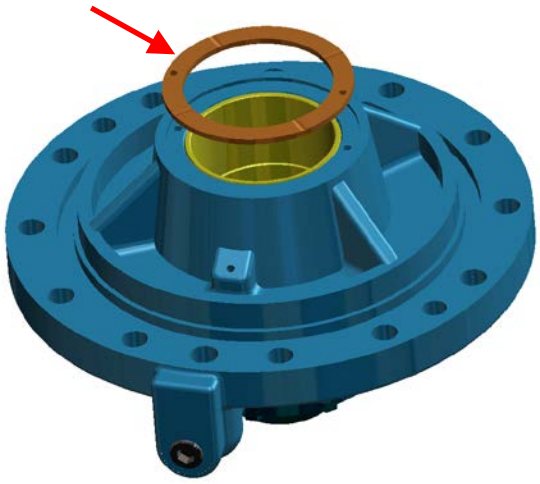

Fig.9.7 Mounting Thrust washer

g． The pump shaft fits into the crankshaft groove during the final 20mm of travel. If the pump shaft does not fit into the crankshaft groove, the bearing housing will stop movement and it will become difficult to push in the shaft. Turn the bearing housing left and right to ensure a tight fit. (If the bearing housing is turned while pushing down, the pump shaft is also rotated, therefore turn the bearing housing while pressing on the pump shaft or turn the bearing housing after pulling on the bearing housing slightly.)

h． When the shaft fits into the groove properly, it can easily be pushed into the crankcase. Fasten the bolts lightly, confirm that the crankshaft rotates smoothly, and then tighten the bolts to the specified torque.

i． Move the shaft in the axial direction and measure the thrust gap.(Standard gap：0.4～1.15mm)

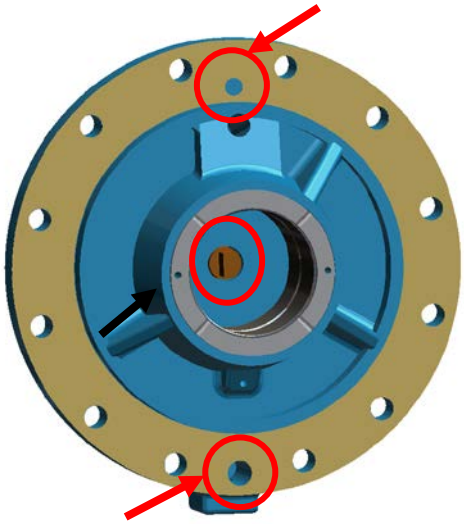

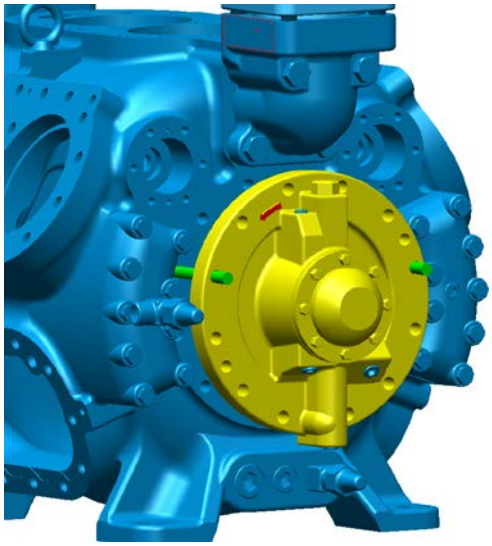

Fig.9.8 Preparing for Bearing Housing Mounting Fig.9.9 Reassembly of Bearing Housing

9．5 Shaft Seal (P/N32)

a. Fit the floating seat on the shaft seal cover (P/N26). Apply oil to the 0-ring and press evenly onto the seat by finger.

[Caution] The floating seat, made of carbon, is weak against impact load. Care must be taken not to strike the floating seat with a solid tool or to allow the friction surface to become scratched. Otherwise the seat can not be utilized.

Fig.9.10 Reassembly of Floating Seat

b. Set two set screws on shaft seal collar to the fixed counter sinkings and tighten them firmly. Using a hex wrench inserting the plug hole pointed by the red allow in Fig.9.11 makes this work easier.

c. Apply lubrication oil to the gasket and stick it to the seal cover, being sure to mate the oil holes.

d. Apply oil all over the surface of the shaft seal assembly and the floating seat, and then mount the shaft seal assembly in the shaft seal cover (P/N26) while maintaining perpendicular to the shaft. Special care must be taken to ensure that the shaft end and the friction surface of the floating seat do not touch each other.

e. While securing the shaft seal cover by hand, install the shaft seal cover on the crankshaft with bolts (P/N28) and tighten to the specified torque. Turn the crankshaft by hand to confirm that the shaft seal cover is correctly positioned. When the crankshaft does not rotate or move, there is a possiblity that the shaft seal is not mounted correctly. In that case, perform disassembly and reassembly work again.

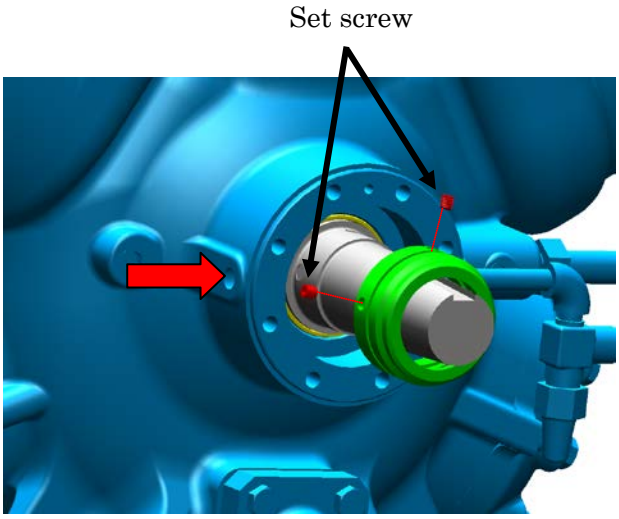

Fig.9.11 Installing Seal Assembly

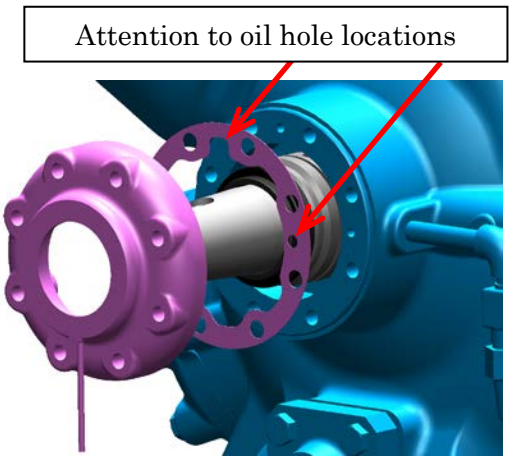

Fig.9.12 Installing Shaft Seal Cover

9．6 Cylinder Assembly

9．6．1 Piston (P/N85) and Piston Rings (P/N89, 90)

a． Mounting the Piston Rings (P/N89 and 90) and Oil Ring (P/N100) on the Piston (P/N85).The piston rings should be mounted starting with the oil ring (bottom) and moving upward in order.

Table 9.1 Composition of Piston Rings and Oil Ring

		CO_2	NH_3
1st (top) ring	Piston Ring	FC-P	FC-PC-BF-G1
2nd (middle) ring	Piston Ring	FC-P	GA-P
3rd (bottom) ring	Oil Ring	FC-CO	FC-PC-BC3

b． When attaching the piston rings on the pistons, care should be taken to avoid excessively widening or distorting the rings. After attaching each ring into its respective ring groove, confirm that the ring moves smoothly in the groove.

c． The ring end gap of each ring should be spaced 120~180°apart.

a) Attaching Oil Ring　　b) Attaching Piston Rings

Fig. 9.13 Attaching Piston Rings and Oil Ring

9．6．2 Piston (P/N85) and Connecting Rod (P/N77)

a． Place the piston upside down and attach the connecting rod small end using the piston pin (P/N86), as shown in Fig.9.14. Apply oil to the bearing halves of the connecting rod big end, the bearing portion of the connecting rod small end and the piston pin (P/N 86). The piston pin is loose fitted so it can be easily mounted in the pin hole of the piston by pushing it lightly.

b． Mount the piston pin lock spring (P/N87). Confirm that the lock spring is exactly fixed into the spring groove of the piston.

c． The bearing half metal locking claw should mate with the notch of the connecting rod cap (see Fig.9.14). There are two kinds of bearing halves. One has an oil hole and the other does not have it. The bearing half with a oil hole should be mounted on the connecting rod and the other on the connecting rod cap.

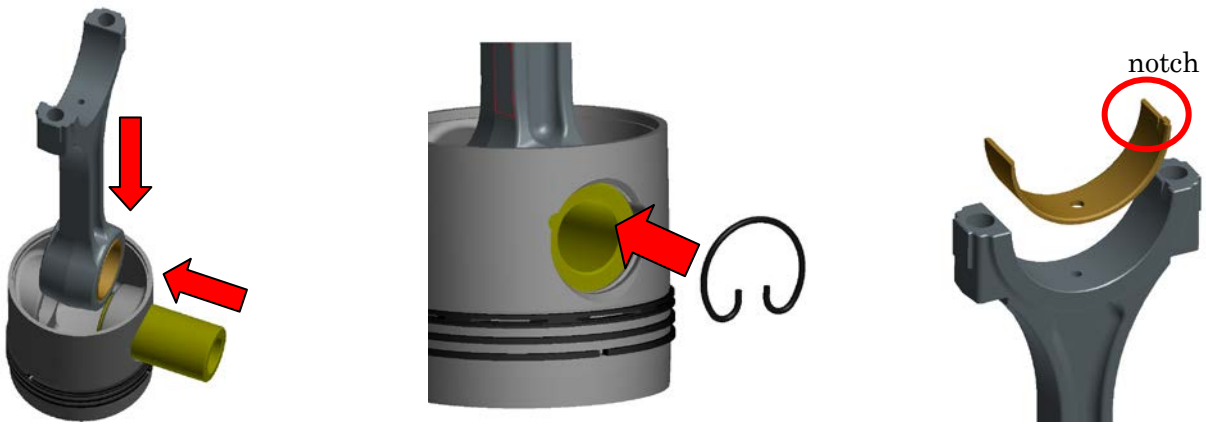

Fig. 9.14 Mounting Piston and Connecting Rod

9．6．3 Cylinder Sleeve (P/N61)

a． If the cylinder sleeve is replaced, first drive the positioning pin (P/N61-1) into the flared portion of the cylinder.

b． Mount the unloader lift pins (P/N68), the lift pin springs (P/N69) and then install the lift pin E-rings (P/N70) in order.

c． Mount the cam rings (P/N62 & 63) and secure with the retaining ring (P/N65). Care must be taken to ensure that the slant direction of the cam ring is correct. Turn the cam ring to engage the notch on the cam ring with the retaining pin (P/N61-1). The most suitable position of the notch on the cam ring is placed on the slope of the cam ring.
Regarding the relationship between the mounting position of the cam ring and the slant as well as the position of the retaining pin (P/N61-1), refer to the Table 5.2 and the figures below.

* When the slopes of the cam ring is right downward slanted:
The notch on the cam ring should be located at 45° turning leftward from the positioning pin.
* When the slope of the cam ring is left downward slanted:
The notch on the cam ring should be located at 45°turning rightward from the positioning pin.

a) Mounting Lift pin (P/N68)

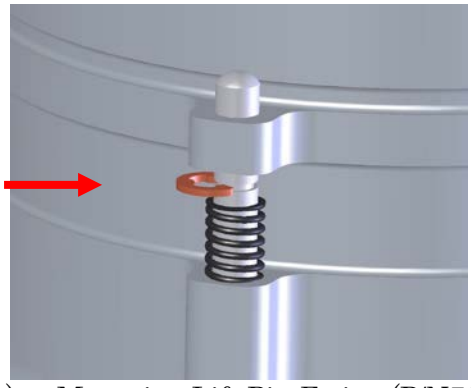

b) Mounting Lift Pin E-ring (P/N70)

c) Mounting Cam Ring

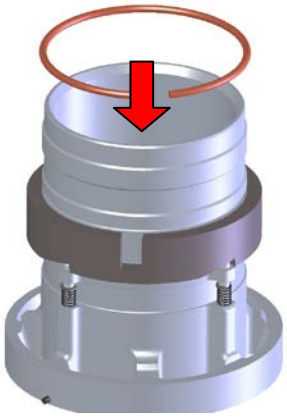

d) Mounting Retaining ring

Fig.9.15 Unloader Mechanism reassembly

Table 9.2 Cam ring remounting

Piston No.	6HK
1	—
2	right slanted
3	left slanted
4	—
5	right slanted
6	left slanted

Model 6HK Compressor

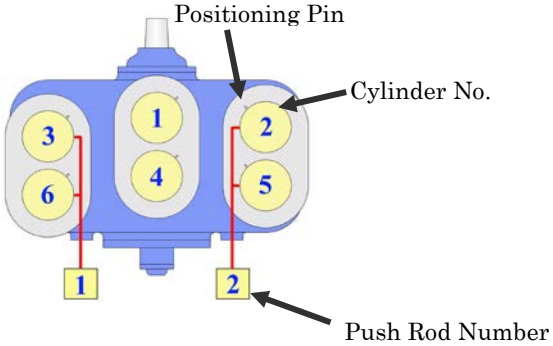

Fig. 9.16 Cylinder Number

9．6．4 Cylinder Sleeve (P/N61) and Piston/Connecting Rod reassembly

a．Place the cylinder sleeve with the seat side facing down. If the reassembly work for the cylinder sleeve, piston and connecting rod is carried out on a rubber sheet or fine metal surface, it may be difficult to remove the air inside the assembly. In such case, turn the cam ring to raise the lift pins (P/N68) from the sheet surface.

b．Apply lubricating oil to the piston and piston rings while holding the connecting rod portion of the piston/connecting rod assembly, then insert into the cylinder sleeve approximately half-way. The piston ring section of the piston is inserted into the cylinder from the tapered end of the cylinder sleeve while pushing the rings into grooves.

c．Stop insertion of the piston midway into the cylinder sleeve so the cam ring can be positioned in the same location as before disassembly.

d．Put the cylinder assembly, connecting rod cap, bolts and nuts together for each different cylinder to keep organized.

Fig.9.17 Reassembly of piston/connecting rod

9．7 Mounting Unloader Mechanism

a．Mount the washers (P/N143) and the springs (P/N142) on the unloader push rods (P/N135 & 136), and insert them into the crankcase.

b．Mount the unloader piston (P/N145) on the crankcase and secure the piston with the unloader cover (P/N146). The unloader cover should be eccentrically slipped out somewhat as showed in Fig.9.19 a). When the piston end surface and the flange surface of the crankcase are aligned evenly, the protrusion portion of the unloader push rod is placed at the center of the cylinder, thus positioning is achieved. Should the unloader cover be mounted normally without slipping out, the pin portion of the unloader push rod is slightly slipped out from the center portion to the direction of the unloader cover. If a different length of push rod is selected, the protrusion portion of the push rod will not reach the center portion of the cylinder, resulting in unloader mechanism malfunction.

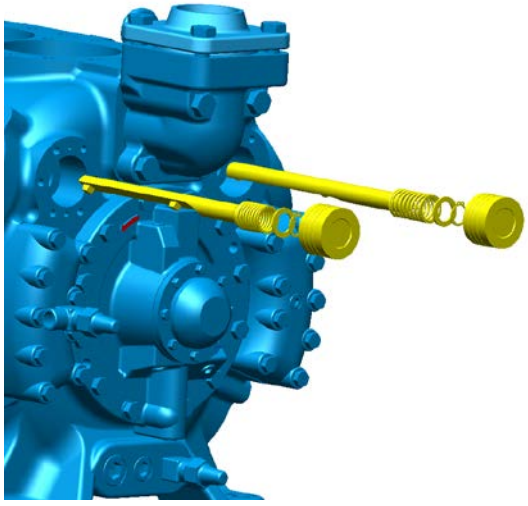

Fig.9.18 Mounting Unloader Mechanism

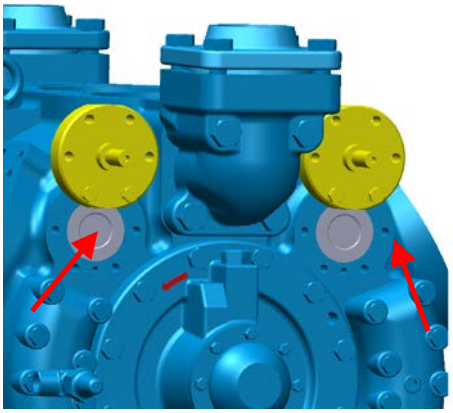

a) Mounting Unloader Cover (P/N146)

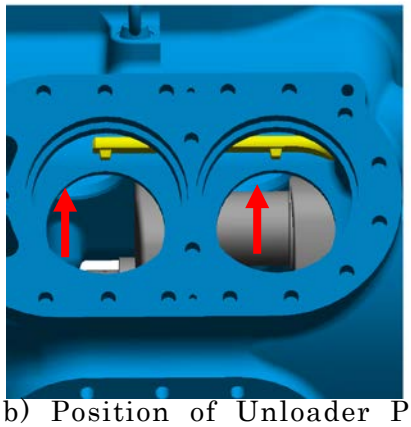

b) Position of Unloader Push Rod(P/ N135,136))

Fig.9.19 Positioning of Unloader Push Rod

9．8 Mounting Cylinder Assembly in Crankcase

a．The cylinder assemblies should be mounted in the crankcase in order of cylinder number (refer to Fig. 9.16). Alternatively, mount the cylinder assemblies from the end of the crank pin portion in order. Confirm the slant direction of the cam ring, the position of the notch on the cam ring and the direction of the retaining ring once again (refer to 9.6.3, Cylinder Sleeve). Install the bolts (P/N78) on the connecting rod (P/N77).

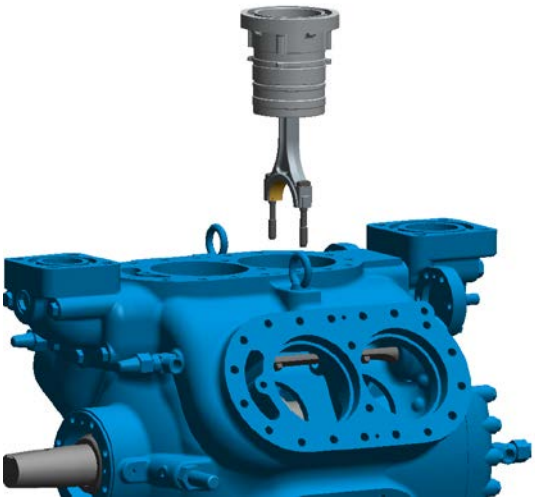

Fig. 9.20 Mounting Cylinder

b．Position the crank pin end of the cylinder at bottom dead center, and then apply lubrication oil to the crank pin and the bearing halves. While maintaining the piston position at the top of the cylinder, insert the cylinder assembly into the cylinder hole in the crankcase. When the notch of the cam ring is mated with the pin of the unloader push rod, fix the retaining ring of the cylinder sleeve with the groove on the crankcase, then push the cylinder assembly into the crankcase.

c．While securing the connecting rod by hand, push the top of the piston down to insert the piston/connecting rod assembly into the crankcase and fit the bearing metal portion of the connecting rod big end on the crank pin portion of the crankshaft. Care must be taken to insert the assembly properly. If the connecting rod rotates or slips, the connecting rod cannot be mounted satisfactorily. Move the connecting rod back and forth or right and left slightly by hand to confirm that the rod is properly fitted.

d．Confirm the rod cap fitting direction, mount, and install the washers (P/N79) and the first nut (P/N80) after confirming that the mating numbers on the big end and the rod cap match. Tighten the bolts alternately to the specified torque.(When it is tightened to specified torque, the shape of bearing half metals is complete round. Refer to “Tightening Torque Values of Bolts & Nuts “ at the end of this manual about the specified torque.)

e．Install the second nut on each bolt and tighten to the specified torque.

f．Rotate the crankshaft once after installing each assembly to confirm smooth movement and slight movement in axial direction. When moving crankshaft, hold the cylinder and move it slowly. Not yet being secured the cylinder will be moved up by the frictional force of the piston rings. In this case, it is possible to retain the cylinder sleeve temporarily using a washer and bolt (P/N73-1) for the valve plate (P/N73).

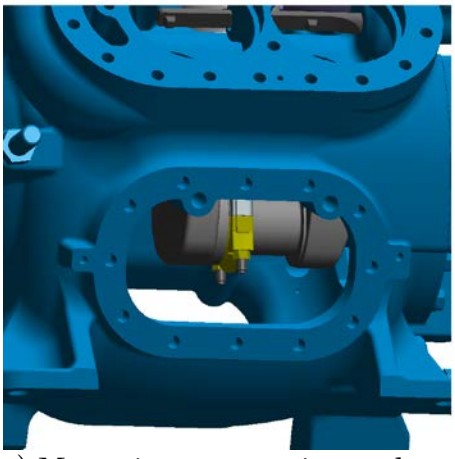

a) Mounting connecting rod cap on crankshaft and tightening No.1 nut

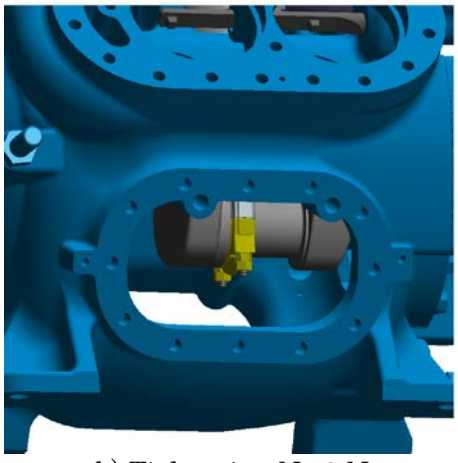

b) Tightening No.2 Nut

Fig. 9.1 Tightening Connecting Rod Nuts

9．9 Valve Plate (P/N73)

a . Mount the suction valve springs (P/N72) in the spring holes on the suction valve side of the valve plate (P/N73). As the outer diameter of the spring is somewhat larger than the spring hole, it must be twisted into the hole.

b . Mount the suction plate valve (P/N71) on the valve plate (P/N73) and secure the suction plate valve using the valve clip (valve gland) contained in the hand tool kit. Suction valve plate mounting should be carried out for two cylinders at the same time.

c . Apply lubrication oil liberally on the valve plate gasket (P/N73-4) and mount the gasket on the crankcase. At this time, confirm that the valve plate positioning pin (P/N75-1) is set satisfactorily.

d . Confirm that the unloader lift pins (P/N68) are lower than the seat surface of the cylinder sleeve. When the place of the unloader cover and the unloader piston remains unchanged after the unloader sleeve is mounted, the lift pin position will automatically be located at the lower position.

e . Mount the valve plate (P/N73) carefully making use of the positioning pin (P/N73-3). Tighten the two center bolts (P/N73-1), and then remove the valve clip. Confirm that the plate valve (P/N71) is positioned correctly. If the plate valve slips from the proper position, a gap is generated between the valve plate and the gasket or between the gasket and the crankcase. Confirm that there is no gap between these parts. When a cylinder is complete with an unloader mechanism, movement of the unloader mechanism can be confirmed easily because the plate valve will move up and down when the unloader piston is pushed (when the unloader piston is pushed, the plate valve closes).

[Caution] Do not open the unloader cover before mounting the valve plate, otherwise the protrusion portion of the unloader push rod will slip out of the notched portion of the cam ring, and be difficult to reinsert.

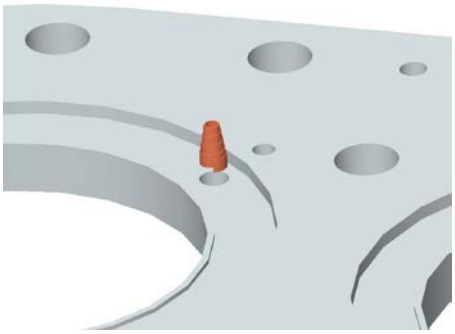

Fig.9.22 Mounting Valve Spring

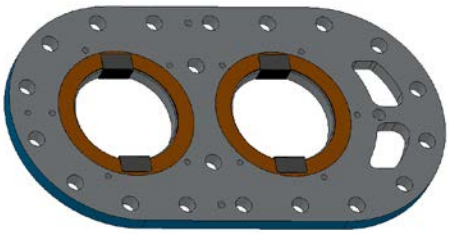

Fig.9.23 Valve clip setting

Fig.9.24 Mounting Valve Plate

9．10 Unloader Cover (P/N146)

a . Push the unloader piston (P/N145) by hand to confirm whether the unloader device works satisfactorily or not.

b . Confirm that the oil passageway of the unloader cover gasket, the oil hole in the crankcase and the oil passageway of the unloader cover are properly aligned. (Also confirm that the small oil supply hole in the unloader cover is located at the top and the large oil drain hole is at the bottom. Marked “IN” furface faces up)

c . Fix the unloader cover bolts (P/N149) temporarily, and then tighten the bolts to the specified torque in a crisscross order.

d . Mount the solenoid valve coil using the locking bolt.

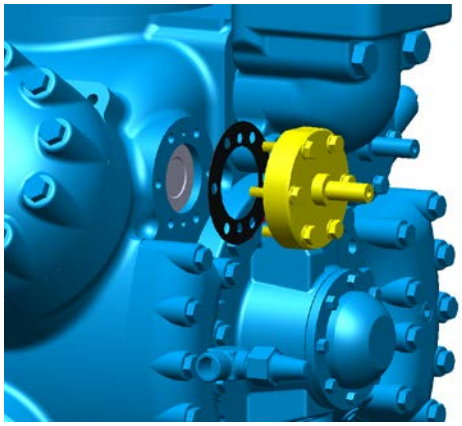

Fig.9.25 Mounting Unloader Cover

9．１１ Discharge Valve Cage (P/N109)

a． Mount the discharge valve spring (P/N116) on the discharge valve cage (P/N109). Screw the spring into the hole as with the discharge plate valve (P/N110).

b． Position the discharge plate valve (P/N110) on the discharge valve cage (P/N109) and secure with the discharge valve seat (P/N111). The discharge valve seat should be aligned with the discharge valve seat positioning pin (P/N115) located at the center.

c． Attach the triangular discharge valve retainer (P/N112-2) while press-fitting the valve seat (P/N111) so the plate valve is in the correct position, then mount the discharge valve cage (P/N109) using the bolts (P/N112). If the bolts are tightened with the wrong plate valve position, the plate valve will be deformed. Special care must, therefore, be taken during reassembly. (Bending the end of the discharge valve retainer (P/N112-2) slightly before mounting makes this work carried out easier).

d． Tighten the bolts (P/N112) to the specified torque, then confirm that the discharge plate valve (P/N110) moves smoothly. Also confirm that the bolt heads are almost even with the valve seat face. If they are significantly lower than the seat face with some threads exposed, the wrong bolts may have been used, while if the bolt heads protrude from the seat face, they may interfere with the piston, resulting in serious damages. Make sure to use a bolt with the right length.

e． Bend the discharge valve retainer washers (P/N112-2) using a screw driver, as shown in Fig.9.26-c) below. If the discharge valve cage guide (P/N74) is mounted previously on the valve plate (P/N73), remounting work can easily be performed.

f． The valve plate (P/N73) should be mounted along with the cage guide (P/N74).

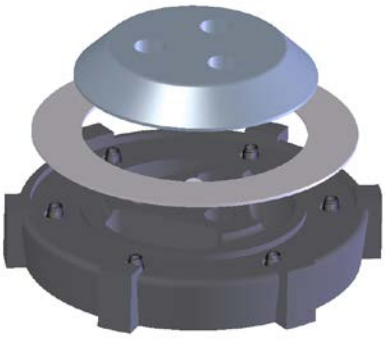

a) Assembly of valve(P/N110) and valv111e seat (P/N111)

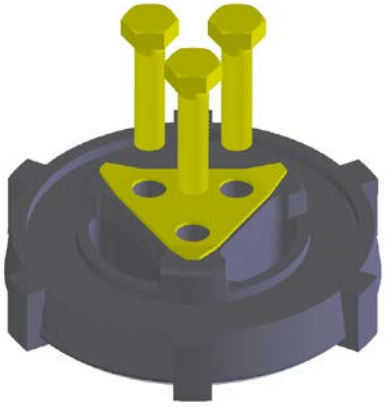

b) Mounting retainer washer (P/N112-2) and retainer washer bolts (P/N112)

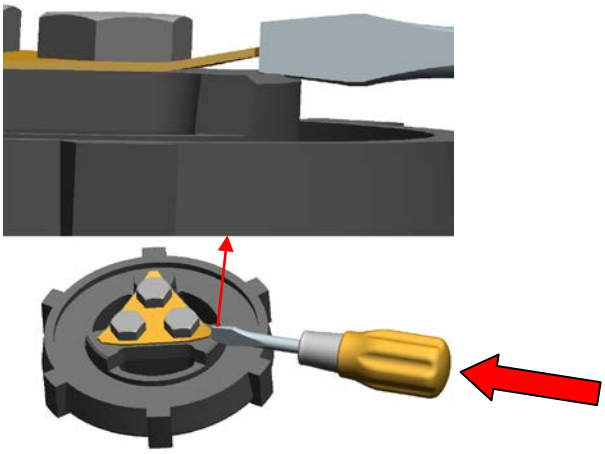

c) Bending retainer washer(P/N112-2)

d) after retainer washer bent

Fig. 9.26 reassembly of discharge Valve Assembly

9．１２ Head Cover (P/N49, 50)

a． Apply lubrication oil to the head cover gasket (P/N51) and mount the gasket on the valve plate (P/N73). Mounting the head cover should be carried out in the reverse order of disassembly, starting with the lower head covers. Screw a long headless safety bolt or a fully thread bolt into one or two screw holes of the crankcase to prevent the head cover gasket (P/N51) from slipping out of position while assuring work safety.

b． Mount the safety head spring (P/N117) on the discharge valve cage (P/N109).

c． Mount the head cover carefully so that the safety head spring does not drop. Confirm that the safety head springs mate into the pits on the head cover, then mount two bolts (P/N52) in the head cover bolt holes at symmetrical positions.

d． Screw the bolts (P/N52) into the screw holes in the head cover while pressing it. Due to the spring force the head cover tends to move up. When the two bolts engage the screw holes, tighten them slightly while leaving clearance between the head cover and the valve plate.

e． Screw all remaining bolts (P/N52) into the remaining screw holes and finally tighten the bolts to the specified torque in a crisscross pattern.

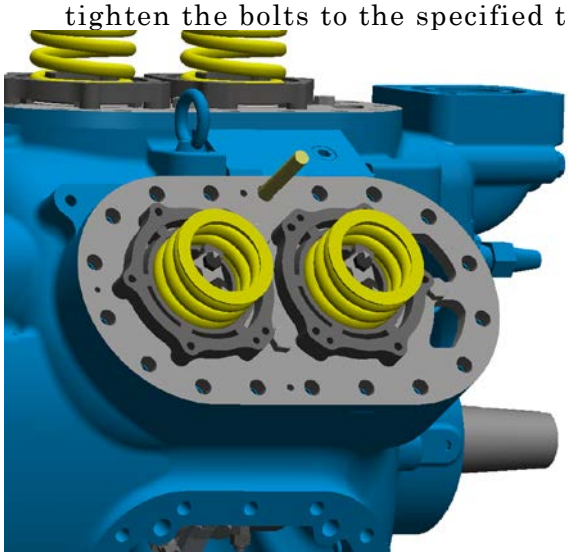

Fig.9.27 Remounting Head Springs

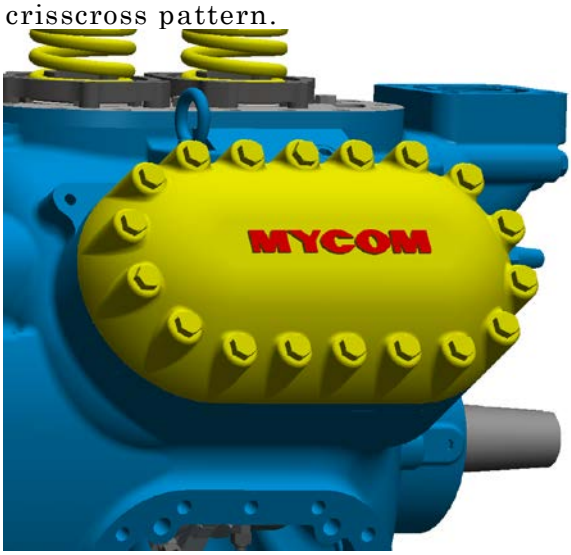

Fig.9.28 Remounting Head Cover

9．１３ Hand-hole Cover (P/N 45) and Hand-hole spacers (P/N34,35)

[Caution] Before remounting the hand-hole cover, confirm the mating numbers of the connecting rods, the tightness of the filter (P/N119), nuts and check that no hand tools or component parts are left inside the crankcase.

a． Apply lubrication oil to the hand-hole cover gasket (P/N47) and stick the gasket to the hand-hole cover spacer.

b． Position the hand-hole cover spacer to the right position and secure it using two hexagon socket head cap screws, with the pressure equalization hole cover (P/N39) side facing inside the crankcase. If long headless safety bolts or fully thread bolts are used, mounting work can easily be carried out as with the head cover reassembly work.

c． In order to mount the hand-hole cover screw all remaining bolts (P/N48) into the holes and tighten them in a crisscross pattern to avoid unbalanced tightening. Finally, tighten them to the specified torque.

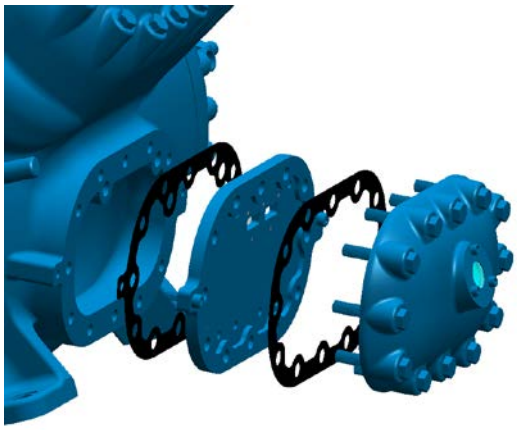

Fig.9.29 Remounting hand hole cover and spacers

d． When the oil sight glass is renewed or dismantled, do not forget to retighten the bolts (P/N167) to the specified torque.

９．１４ Suction Elbow (P/N175) and Discharge Elbow (P/N168)

a． Mount the suction filter (P/N154) in the suction filter trap.

b． Mount the suction elbow (P/N175) on the crankcase and tighten the bolts (P/N177-1 & 177-2) to the specified torque.

c． If the discharge elbow (P/N168) is dismantled, retighten the bolts (P/N170-1, -2 & 170-3) to the specified torque.

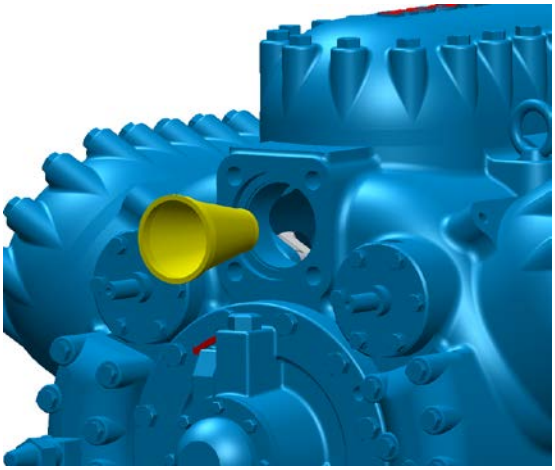

Fig.9.30 Suction Filter mounting

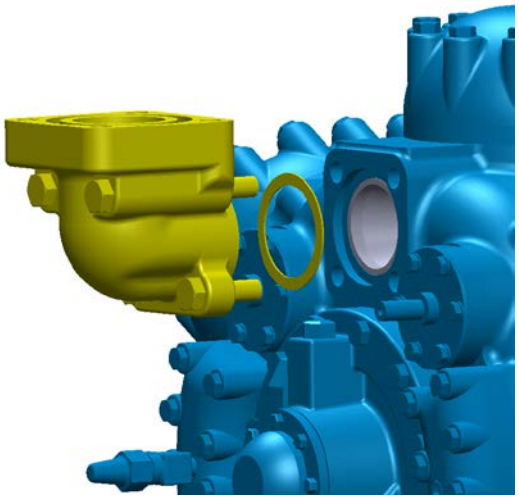

Fig.9.31 Suction Elbow mounting

９．１５ Head Jacket Cover (P/N53)

※ Applicable for water-cooled type compressor only

a． Mount the rubber jacket cover gasket on the crankcase. It is not necessary to lubricating the gasket with oil.

b． Confirm the mounting position and direction of the jacket head cover (P/N53), then tighten the bolts (P/N54) to the specified torque.

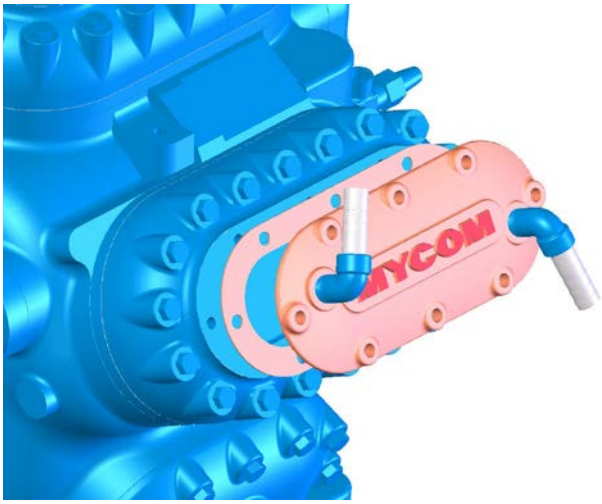

Fig.9.32 Jacket head cover mounting

９．１６ External Oil Filter

a． Mount the oil drain plug to the bottom of the external oil filter.

b． Insert the oil filter element in the mounting port. Confirm that the oil filter element is firmly seated.

c． Check the condition of the 0-ring and replace it with a new one if any abnormality is observed.

d． Confirm the oil flow direction indicated at the top of the flange, and then tighten the bolts. Care must be taken not to mount the filter element backwards, otherwise clogging of the filter element, malfunction of the clogging indicator or damage to the filter element will result in.

e． Mount the locking bolts and tighten them evenly.

Chapter 10 Parts Inspection and Replacement Criteria

Warning

・Be sure to use only MAYEKAWA genuine parts for replacement. Use of substitute parts may result in serious problems in the compressor or other equipment in your refrigerating system during operation. There could be electric shock caused by electric leak.

１０．１ Lubrication Oil Replacement

ａ．In addition to daily inspection of the quantity, contamination level, color, etc. of the oil, an oil sample should be extracted every six months for analysis by the oil manufacturer.

ｂ．If the lubrication oil becomes extremely dirty, do not hesitate to replace it. If the oil is light coffee brown in hue (ASTM-6 or more), replace the oil immediately.

ｃ．Check the oil trap in the bottom of the crankcase periodically for metallic residue. If any metal particles are found, determine the source. Residue found in the trap may include dirt from the suction piping or particles from the frictional parts of the compressor.

ｄ．If foreign matter finds its way into the compressor, the friction parts of the system may be subject to premature wear or damage. It is, therefore, vital that all precautions be taken to prevent contamination and to maintain clean oil.

ｅ．If the oil filter mounted inside the crankcase becomes dirty, carry out cleaning immediately.

ｆ．Check the external oil filter often to identify dirt at an early stage. If dirty is found in the external oil filter, replacement should be carried out as soon as possible because this filter is made of fine mesh and is prone to clogging.

ｇ．When taking an oil sample to be forwarded to the oil manufacturer for analysis, judgment should be made referring to the following standards

１．Oil analysis items

In general, analysis of the oil should be carried out to evaluate the characteristics indicated below. Normally, a 200ml (200cc) sample in a clear plastic or glass bottle is sufficient for analysis.

① Hue (ASTM)	[ASTM]
② Kinematic viscosity	[mm^2/S 40℃]
③ Total oxidation	[mgKOH/g]
④ Moisture content	[ppm or vol/s]
⑤ Milipore filter	[mg/100ml]

Note: Analysis of 1)-5) above is considered routine. In addition to the above, it is also recommended that the following be checked.

⑥ Fluidity	[℃]
⑦ Wax fog point	[℃]
⑧ Metallic contents	[WC、ppm]

２．Quality management of Lubrication Oil

If any of the criteria below is not met, oil replacement is required.

① Color	Max. L6.0 according to ASTM D 1500
② Kinematic viscosity	Within±15% in variation when compared with fresh oil
③ Total acid number (TAN)	Max. 0.3 mgKOH/g
④ Water content	Max. 100 ppm
⑤ Contamination level (Millipore filter)	Max. 15 mg/100ml

Deterioration of the oil is generally determined by the values of 1) through 3) above criteria. If the level of water content or contamination by foreign particles is significantly, the oil should be replaced immediately and remove the causes of the water or foreign particles.

Abnormal moisture:

a) The system is not properly sealed and moisture and/or air enters the system during short-term storage, or

b) The original oil contains an excessive amount of moisture due to long term storage in an improperly sealed container.

Abnormal Millipore values:

a) The interior of the system has not been adequately cleaned and residue inside the piping has been flushed through other components to the compressor crankcase with the refrigerant and oil, resulting in the residue mixing with the oil in the reservoir of the crankcase, or

b) Abnormal abrasion of moving parts is also a potential source of residue accumulation.

１０．２ Suction Filter (P/N154) and Oil Filter (P/N119)

a．Check for mesh damage and soldering faults. If any faults are found, repair or replace with a new filter.

b．If any dirt remains in the fine mesh after cleaning, blow out them with compressed air in the opposite direction to fluid flow

１０．３ Crankshaft (P/N2)

a．Check for abrasions of the crankshaft journals. Abrasions create level differences between friction parts and non-friction parts, so they are identified by visual checking or touching them. Check each journal for the abrasions using a micrometer. If measurements exceed service limits, replace the crankshaft.

(mm)

Measurement point	standard	service limit
Main bearing diameter	70	69.88
Thrust bearing diameter	75	74.88
Crank pin diameter	60	59.88

b．Frictional parts of the crankshaft may be damaged during disassembly work. If any scratches or scoring is found, polish using fine emery paper (#800 mesh or more) or an oil stone.

c．Remove all plugs from the crankshaft and clean the oil ports thoroughly. Especially, as the plugs themselves are liable to accumulate dirt, wash the plugs thoroughly in kerosene or lubrication oil repeatedly before reinstalling. If the plugs are not reinstalled, compressor seizure and seal leakage will result.(Seal tape is not necessary.)

d．Inspect the mechanical seal mounting face of the crankshaft for scratches or scoring. If any scratches or scoring is found, repair using a fine oil stone or fine emery paper (#800 mesh or more).

１０．４ Mechanical Seal Assembly (P/N32)

a．Check the frictional face of the shaft seal cover side floating seat and the crankshaft side seal ring. If the frictional face of the mechanical seal is uniformly bright, it is considered appropriate. If not, replace the mechanical seal assembly.

b．If scratches or scoring are found on the frictional face of the floating seat, replace the seal assembly with a new one.

c．Two 0-rings are used. If disassembly or inspection is carried out, replace these 0-rings with new ones.

１０．５ Piston (P/N85), Piston Pin (P/N86) and Piston Ring (P/N89, 90 & 100)

a．The circumference of each piston should be inspected carefully for damages. If any damage is found, polish with fine emery paper, moving the paper perpendicular to the direction of movement during operation.

b．If the outer diameter of the piston exceeds the service limit given below table, replace it with a new one.

(mm)

measuring point	standard	service limit
Piston diameter	85	84.80

c．The piston pin hole and the piston pin are designed as floatable in relation to each other. If the measured clearance exceeds the service limit given below table, replace the piston pin or the piston, whichever shows the greater degree of wear.

d．If the outer diameter of the piston pin exceeds the service limit given below table, replace the piston pin with a new one.

(mm)

measuring point	standard	service limit
clearance between piston pin hole and pistonpin	0.007～0.026	0.15

(mm)

measuring point	standard	service limit
Piston pin diameter	25	24.85

e . Piston ring wear can be identified by measuring the clearance between the ring ends. Insert the piston ring into the cylinder sleeve to a depth of approx. 3mm from the end of the sleeve and measure the ring end gap. If the gap exceeds the service limit, replace the ring with a new one

f . If the clearance between the piston ring groove and the piston ring exceeds the service limit given above, replace the piston ring or the piston.

(mm)

measuring point	standard	service limit
(1st、2nd、3rd)piston ring end gap (1st,2nd and 3rd)	0.15～0.35	1.2

(mm)

measuring point	standard	service limit
Clearance between ring groove and piston ring	0.02～0.06	0.15

１０．６ Connecting Rod (P/N77)

a . Inspect the surface of the bearing metal halves (P/N84) on the big end of the connecting rod. If the bearing metal shows signs of pitting by foreign matter, wear or scoring of the crankshaft pin portion may result. Replace the bearing halves (P/N84) with new ones.

b . If the clearance between the crankshaft pin portion and the bearing halves exceeds the service limit given below table, replace the bearing halves with new ones.

c . If the clearance between the piston pin (P/N86) and the small end pin hole of the connecting rod exceeds the following service limit, replace the piston pin with new one.

(mm)

measuring point	standard	service limit
Clearance between crank pin and bearing halves	0.020～0.079	0.20

(mm)

measuring point	standard	service limit
Clearance between piston pin and connecting rod small end	0.027～0.054	0.15

１０．７ Cylinder Sleeve (P/N61)

a . Check the seat surface of the cylinder sleeve under the suction plate valve (P/N71). If scratches or scoring are found on the seat surface of the cylinder sleeve, polish the seat surface by lapping or replace the cylinder sleeve with a new one.

b . If the seat portion of the cylinder sleeve is worn beyond the service limit given below table, replace the cylinder sleeve with a new one.

c . Check the inner wall of the cylinder sleeve and repair any scratches with a fine oil stone or fine emery paper. If scratches or scoring are too serious to repair, replace the cylinder sleeve with a new one.

d . Check the clearance between the inner surface of the cylinder sleeve and the outer surface of the lower portion of the piston. If the clearance exceeds the following service limit, replace the cylinder sleeve with a new one.

e . If the inner diameter of the cylinder sleeve exceeds the service limit given below, replace the sleeve with new one. Measure the diameter of the cylinder sleeve at a point of 10~20mm below the top of the cylinder, as this area is prone to wear the most.

(mm)

measuring point	standard	service limit
Height of seat portion of cylinder sleeve	0.5	0.2
Inner diameter of cylinder sleeve	85	85.2

(mm)

measuring point	standard	service limit
Clearance between inner surface of cylinder sleeve and lower portion of piston	0.080～0.132	0.3

１０．８ Discharge Valve (P/N110), Suction Valve (P/N71) and Springs (P/N72 & 116)

a . The discharge plate valve (P/N110), suction plate valve (P/N71) and valve springs (P/N72 & 116) must be replaced every 8,000 hours of operation. Durability of these components varies according to operating conditions but the wear limit for the valve seat portion should be less

than 0.15mm from the standard thickness shown below.

b . Even if abrasion of the plate valve seat portion is within the service limit, if scratches, scoring or other damage is found on either the external or internal circumference, this can lead to breakage due to metal fatigue, so replace the plate valve with a new one.

c . The allowable wear limit for the discharge valve seat (P/N111) and the seat portion of the valve plate (P/N73) is 0.2mm.

(mm)

part name	standard thickness	service limit
Discharge plate valve	1.0	0.85 (Valve seat portion)
Suction plate valve		

１０．９ Oil Pump

a . If the oil pressure is low during operation and the oil filter (119) is not clogged, one possible cause is wear of the pump gear, metal and shaft. When carrying out inspection of the oil pump, check the play of the pump shaft by moving the shaft in both the parallel and perpendicular directions using a pair of pliers or nippers. If shaft play is felt, there must be wears. Replace the bearing housing assembly with a new one.

b .。 If the oil pump shaft does not rotate smoothly, it is possible that the surface of the gear portion or the bearing shaft portion of the oil pump is worn out or the pump has been contaminated by foreign matter. Replace the bearing housing assembly with a new one.

１０．１０ Main bushing (P/N12) and Thrust Washers (P/N29-2)

a . If the clearance between the main bushing and the crankshaft exceeds the following service limit, replace the main bearing and thrust washer.

b . If the inner diameter of the main bushing exceeds the service limit given below, replace the bushing with a new one.

c . If the surface of the thrust washer seems slightly rough but no problem is evident, polish the surface using an oil stone. If the thickness of the thrust washer is less than the service limit, replace it with a new one.

(mm)

measuring point	standard	service limit
clearance between main bushing and crankshaft	0.040～0.139	0.3

(mm)

measuring point	standard	service limit
inner diameter of main bushing	70	70.15
Thrust washer	3.0	2.8

１０．１１ Thrust roller bearing (P/N29-1)

a . If roller is damaged or worn or has abnormal abrasion, or retainer is worn, replace the bearing with a new one.

b . If washers of the roller bearing are damaged or worn, replace with a new one.

１０．１２ Springs (P/N69, 72, 116 & 142)

a . Measure the free length of each spring. If the free length of the spring is 10% shorter or more than the standard value given below, replace the spring with a new one.

b . The discharge valve spring (P/N116) and the suction valve spring (P/N72) should be replaced every 8,000 hours of operation. In addition, if any abnormality is found such as breakage or deformation, etc., do not hesitate to replace the springs with new ones.

Spring name	standard dimensions (Free length×coil dia.×outer dia.)
Discharge valve spring (P/N116)	10×t0.2×φ6(max. dia)
Suction valve spring(P/N72)	
Unloader lift pin spring (P/N69)	10×φ0.4×φ5.2
Unloader device spring (P/N142)	72×φ2.8×φ32.3

１０．１３ Gaskets and O-rings

a . After disassembly and inspection have been carried out, replace the gaskets with new ones.

b . Although the O-rings used are made of synthetic rubber, they may deteriorate due to exposure to refrigerant and oil over a long period of time. Periodic replacement is required when disassembly and inspection is carried out, regardless of appearance.

[Caution] The material of gaskets and 0-rings depends on the kind of refrigerant used, therefore do not forget to designate the refrigerant when ordering.

１０．１４ External Oil Filter Element

The oil filter element cannot be refreshed by washing. If the element is extremely dirty, deformed or worn out, replace it with a new one.

Chapter 11 Service Data

Parts Lists

P/N	Name	Code No.	Quantity 6HK	Remarks
1	Crankcase		1	
2	Crankshaft		1	
2-1	Retainer Drive pin		1	φ3×L8
4	Pulley key		1	15×9.7×60
5	Flat washer, pulley		1	φ60
6	Spring washer, pulley		1	For M20
7	Set bolt, pulley		1	M20×L50-10.9
8	Housing, bearing		1	Combined with oil pump
9	Gasket, bearing housing,		1	
10-1	Locking bolt, bearing housing(1)		10	M12×L45-10.9
10-2	Locking bolt, bearing housing(2)		2	M12×L50-10.9
10-3	Spring washer, bearing housing		2	For M12
12	Main bushing		2	Common use with Model K
13	Locking pin, thrust washer		2	φ4×L8, spring pin(one side beveled)
14	Equalizer cover		2	
15	Gasket, equalizer cover		2	
16	Bolt, equalizer cover		18	M10×L70-10.9
20	Oil charge valve(oil supply/drain)		1	R3/8×Rc3/8
22	Oil pressure regulating valve (Assy.)		1	R1/2 Common use with Model K
26	Shaft seal cover		1	
27	Gasket, shaft seal cover		1	
28	Bolt, shaft seal cover		8	M10×L45-10.9
29-1	Thrust roller bearing		1	φ75×φ100×19
29-2	Thrust washer		1	φ93 Common use with Model K
32	Mechanical seal assembly		1	
33	Set screw, shaft seal		2	M8×L8 set screw
34	Hand hole cover spacer (L)		1	
35	Hand hole cover spacer (R)		1	
36	Gasket, hand hole cover spacer(L)		1	
37	Gasket, hand hole cover spacer(R)		1	
38	Bolt, hand hole cover spacer		4	M8×L25-12.9 hexagon socket head
39	Equalizer hole cover		2	
40	Cap screw, equalizer hole cover		10	M4×L10-12.9 hexagon socket head
45	Hand hole cover		2	With sight glass
47	Gasket, hand hole cover		2	
48	Bolt, hand hole cover		24	M12×L70-10.9
49	Head cover (air-cooled)※1		3	Exclusive use for air-cooled type
50	Head cover (water-cooled)※1		3	Exclusive use for water-cooled type
51	Gasket, head cover		3	
52	Bolt, head cover		54	M12×L100-10.9
53	Head jacket cover※1		3	Exclusive use for water-cooled type
54	Bolt, head jacket cover※1		24	M10×L30 Exclusive use for water-cooled type

P/N	Name	Code No.	Quantity 6HK	Remarks
55	Gasket, head jacket cover※1		3	Exclusive use for water-cooled type
61	Cylinder sleeve		6	Common use with Model K
61-1	Positioning pin, cylinder sleeve		6	φ3×L8 Spring pin
62L	Cam ring (Leftward slanted)		2	Common use with Model K
63R	Cam ring (Rightward slanted)		2	Common use with Model K
65	Retaining ring, unloader		4	Common use with Model K
68	Lift pin, unloader		16	Common use with Model K
69	Spring, unloader lift pin		16	Common use with Model K
70	Stop ring, unloader lift pin (E-ring)		16	E4
71	Suction plate valve		6	Common use with Model K
72	Spring, suction plate valve		24	Common use with Model K
73	Valve plate		3	
73-1	Bolt, valve plate (1)		6	M12×L30-10.9
73-2	Bolt, valve plate (2)		3	M10×L30-10.9
73-3	Positioning pin, valve plate		6	φ6×L18 parallel pin Class B
73-4	Gasket, valve plate		3	
74	Cage guide, discharge valve		6	
75	Bolt, discharge valve cage guide		30	M6×L30-10.9
75-1	Positioning pin, cage guide		12	φ6×L18 parallel pin Class B
77	Connecting rod		6	
78	Bolt, connecting rod		12	M10(special)
79	Washer, connecting rod		12	For M10
80	Nut, connecting rod		24	M10(special)
82	Bushing, connecting rod		6	
84U	Bearing half, connecting rod(upper)		6	With oil holed
84L	Bearing half, connecting rod(lower)		6	
85	Piston		6	
86	Pin, piston		6	φ34×L68
87	Lock spring, piston pin		12	Common use with Model L
89	Piston ring (top) ※2		6	Common use with Model K
90	Piston ring (2nd) ※2		6	Common use with Model K
100	Oil ring (Bottom) ※2		6	Common use with Model K
109	Cage, discharge valve		6	
110	Discharge plate valve		6	
111	Seat, discharge valve		6	
112	Bolt, discharge valve seat		18	M8×L40-10.9
112-2	Retainer washer, discharge valve		6	t0.8
115	Positioning pin, discharge valve seat		6	φ6×L18 parallel pin Class B
116	Spring, discharge plate valve		36	Common use with Model K
117	Spring, safety head		6	φ83.5×H63 Common use with Model WA
118	Hex head nipple		1	R1/2×R1/2
119	Oil filter		1	#200 (Soldering type)
135	Push rod, unloader (1)		1	L273 Common use with Model K
136	Push rod, unloader (2)		1	L297 Common use with Model K
142	Spring, unloader device		2	φ30.3×H72 Common use with Model L

P/N	Name	Code No.	Quantity 6HK	Remarks
143	Washer, unloader push rod		2	φ32×φ20 Common use with Model K
144	Stop ring, unloader push rod		2	S20 Common use with Model K
145	Unloader piston		2	
146	Cover, unloader piston		2	
147	Gasket, unloader piston cover		2	
148	Solenoid valve, unloader		2	
149	Bolt, unloader piston cover		12	M8×L40-10.9
149-1	Washer, unloader cover locking bolt		12	For M8
154	Suction filter		1	
164	Glass, oil sight		2	
165	O-ring, oil sight glass		2	Accy. material: neoprene
167	Bolt, oil sight glass gland		6	M6×L15-12.9 hexagon socket head
168	Discharge elbow		1	
169	Gasket, discharge elbow		1	
170-1	Bolt, discharge elbow (1)		2	M12×L130-10.9
170-2	Bolt, discharge elbow (2)		3	M12×L55-10.9
170-3	Bolt, discharge elbow (3)		1	M12×L50-12.9 hexagon socket head
171	Gas (air) purge valve		1	R1/4×Rc3/8
172	Gasket, discharge companion flange		1	RTK 50A
173-1	Companion flange, discharge		1	RTK 50A
174	Bolt, discharge companion flange		4	M16×L45-10.9
175	Suction elbow		1	
176	Gasket, suction elbow		1	Common use with Model K
177-1	Bolt, suction elbow (1)		2	M16×L135-10.9
177-2	Bolt, suction elbow (2)		2	M16×L55-10.9
182-1	Companion flange, suction		1	RTK 65A
183	Bolt, suction companion flange		4	M18×L50-10.9
184	Gasket, suction companion flange		1	RTK 65A
208	Eye bolt, hanger		2	M12
245-1	Bushing, oil heater (Hex head)		1	R1"×Rc1" AB-25×25
-	Oil filter, external		1	
-	Magnet		1	

※1 The head cover component differs depending on whether the unit is the air-cooled type or water-cooled type.
Air-cooled type: Air-cooled type head cover
Water-cooled type: Water-cooled head cover consisting of water jacket cover, jacket cover gasket and locking bolts.

※2 For compressors using CO_2 or NH_3 refrigerant, the material of the piston rings differs as indicated below table.

No.	Name		CO_2	NH_3
89	Piston ring	1st	FC-P	FC-PC-BF-G1
90	Piston ring	2nd	FC-P	GA-P
100	Oil ring	3rd	FC-CO	FC-PC-BC3

Exploded View of Cylinder Portion

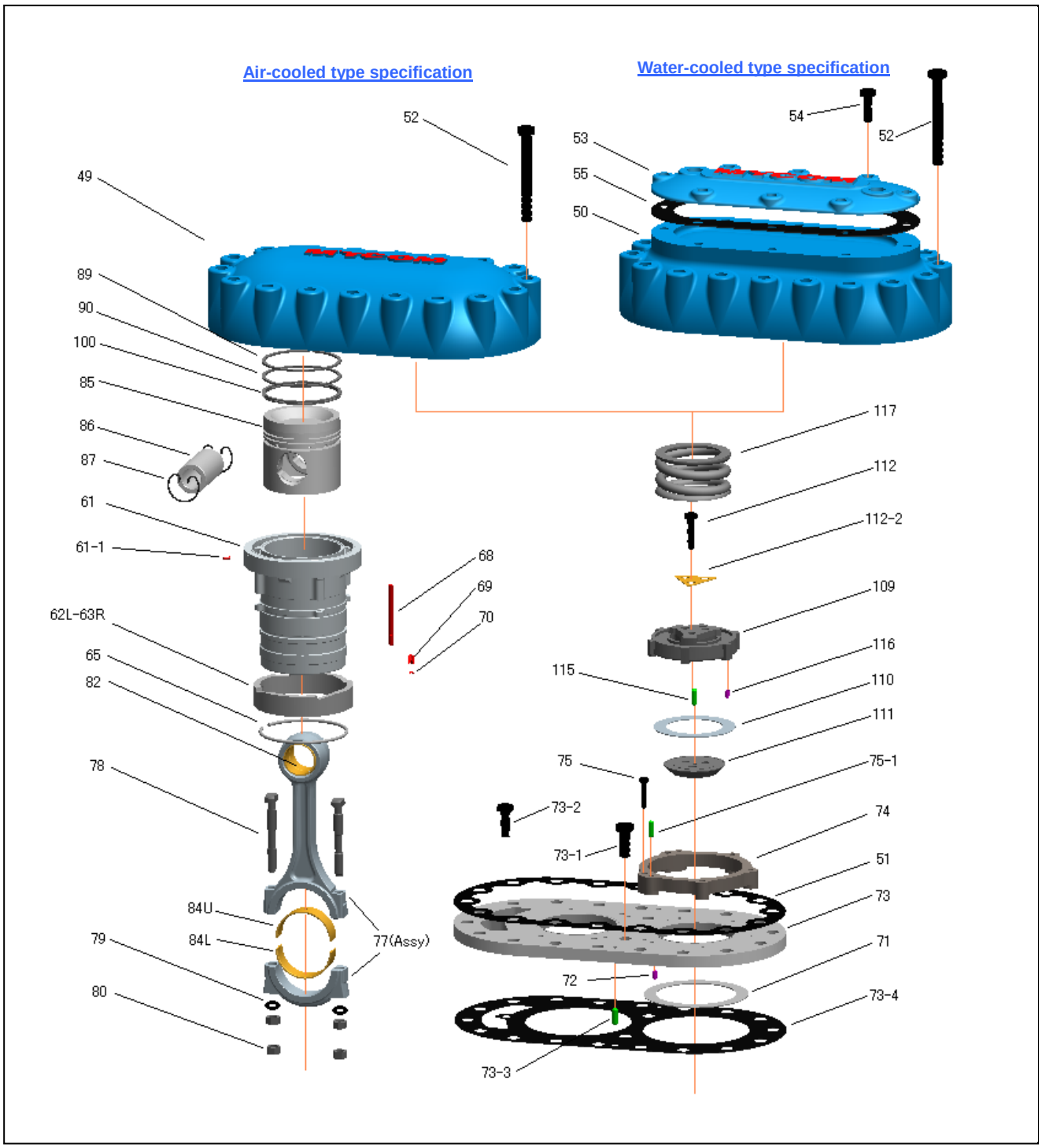

Exploded View of Model 6HK Reciprocating Compressor

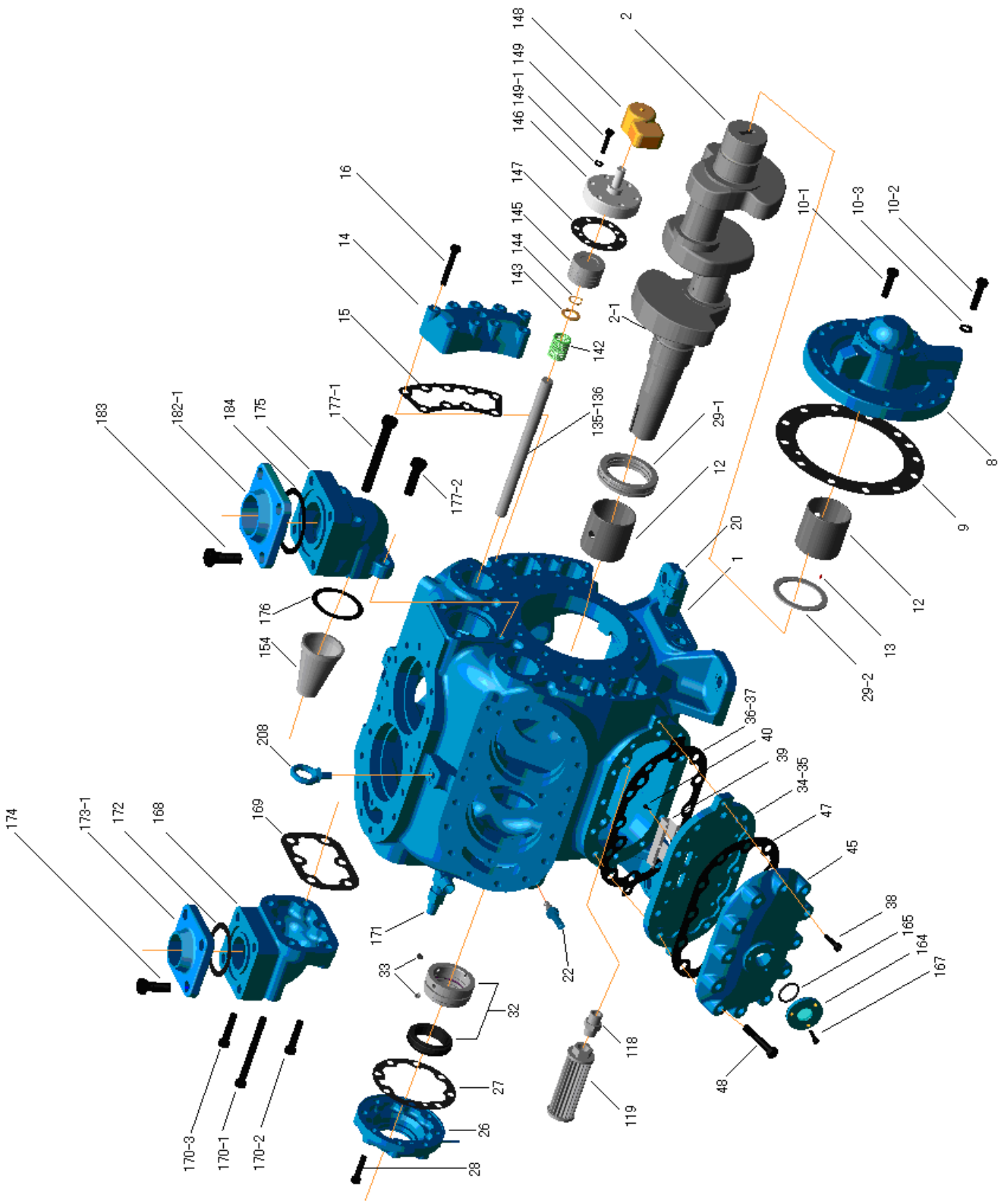

Sectional View

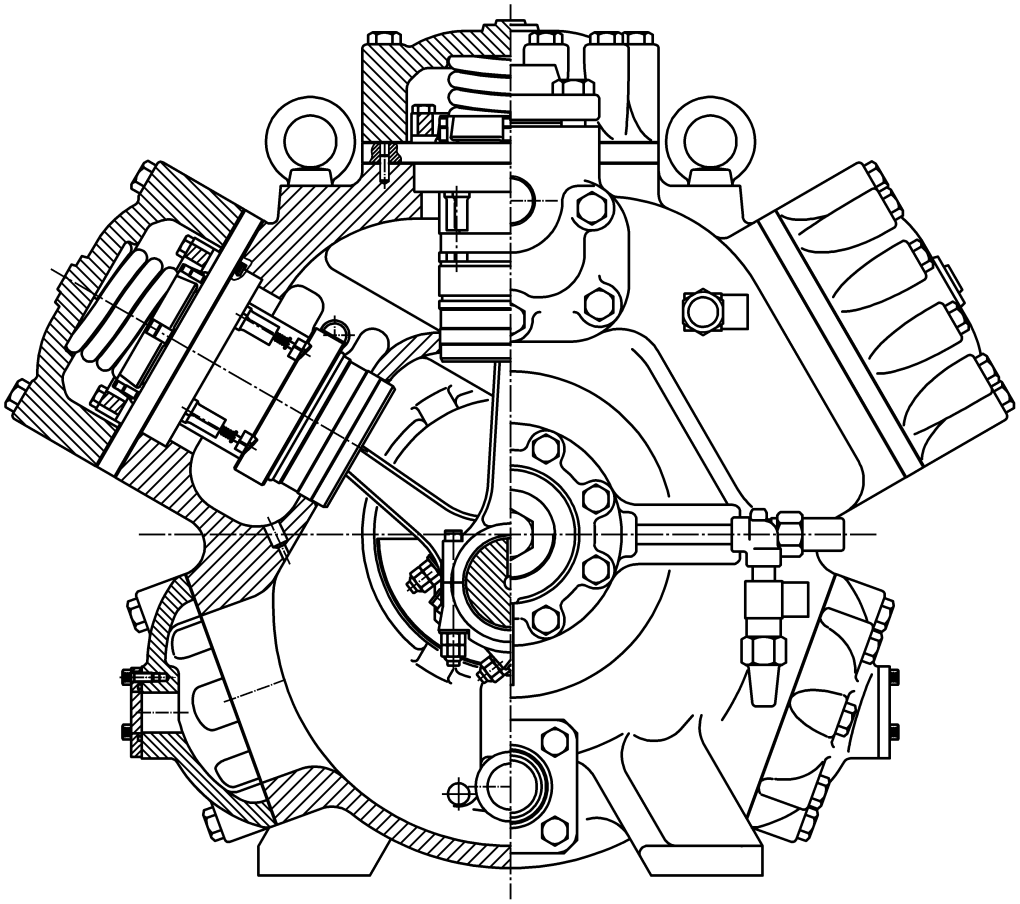

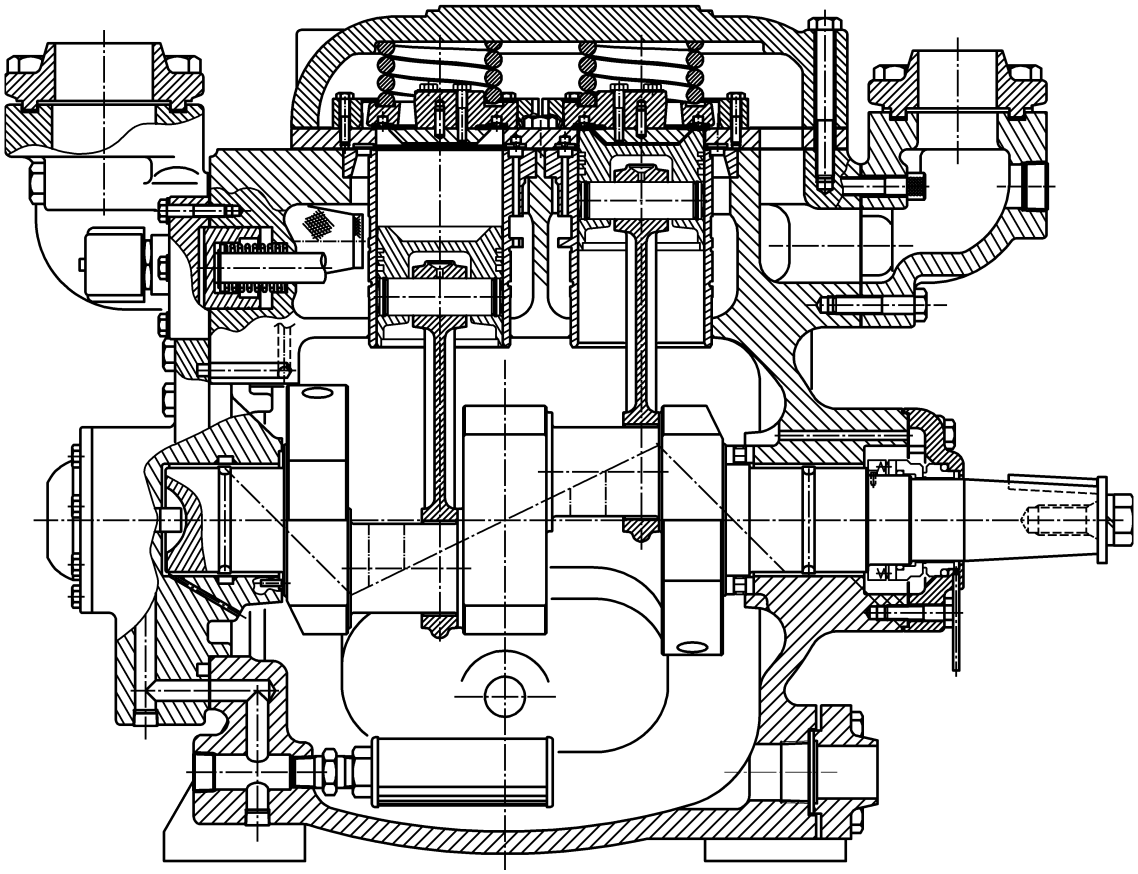

6HK model Gaskets

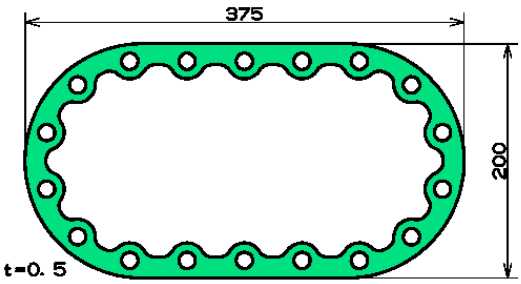

Gasket, head cover

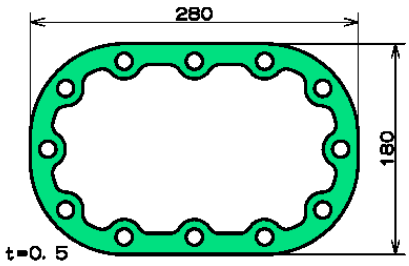

Gasket, handhole cover

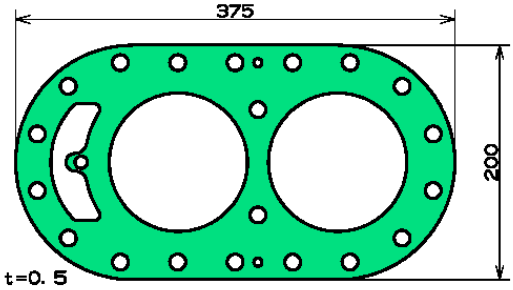

Gasket, valve plate

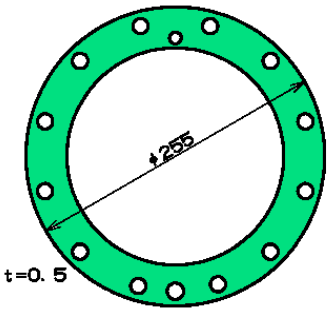

Gasket, bearing housing

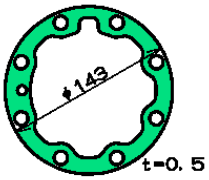

Gasket, shaft seal

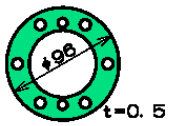

Gasket, unloader cover

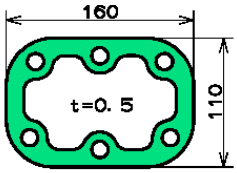

Gasket, discharge elbow

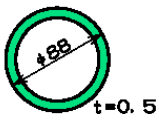

Gasket, suction elbow

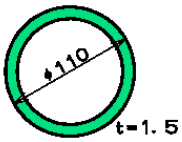

Gasket, 65A Companion flange

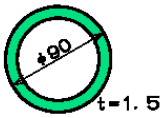

Gasket, 50A Companion flange

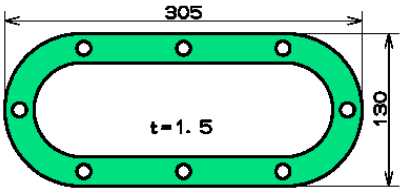

Gasket, head jacket cover

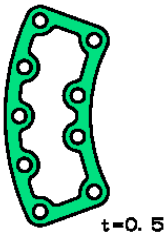

Gasket, Equalizer cover

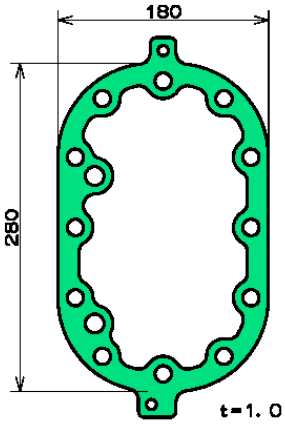

Gasket, handhole cover spacer (L)

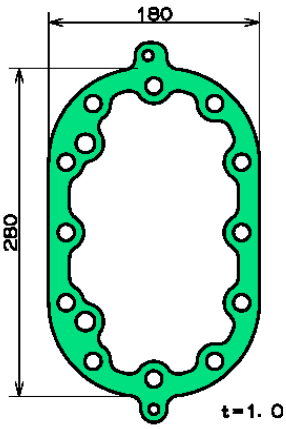

Gasket, handhole cover spacer (R)

Tightening Torques for Bolts and Nuts

P/N	Bolt size	Tensile strength or material	Code No.	Qty. 6HK	Bolt name	N·m (kgf·cm)
	M20×L50	10.9		1	Pulley set bolt	160 (1600)
183	M18×L50			4	Bolt, suction companion flange	140 (1400)
177-1	M16×L135			2	Bolt, suction elbow(1)	120 (1200)
177-2	M16×L55			2	Bolt, suction elbow(2)	
174	M16×L45			4	Bolt, discharge companion flange	
170-1	M12×L130			2	Bolt, discharge elbow(1)	80 (800)
52	M12×L100			54	Bolt, head cover	
48	M12×L70			24	Bolt, handhole cover	
170-2	M12×L55			3	Bolt, discharge elbow(2)	
10-2	M12×L50			2	Locking bolt, bearing housing(2)	
10-1	M12×L45			10	Locking bolt, bearing housing(1)	
73-1	M12×L30			6	Bolt, valve plate(1)	
170-3	M12×L50 hexagon socket head	12.9		1	Bolt, discharge elbow(3)	100 (1000)
	M12×L35 hexagon socket head	12.9		4	Bolt, balance weight	
208	M12 Eye bolt	SF390		2	Eye bolt, hanger	—
78	M10×L81(special)	SCM435		12	Bolt, connecting rod	—
28	M10×L45	10.9		8	Bolt, shaft seal cover	60 (600)
54	M10×L30			24	Bolt, head jacket cover	
	M10×L30			3	Bolt, valve plate(2)	
80	M10Nut (special)	S45C		12	Nut, connecting rod (No.1)	
				12	Nut, connecting rod (No.2)	40 (400)
149	M8×L40	10.9		12	Bolt, unloader piston cover	30 (300)
112	M8×L40			18	Bolt, discharge valve sheet	
75	M6×L30			30	Bolt, discharge valve cage guide	10 (100)
167	M6 × L15 hexagon socket head	12.9		6	Bolt, oil sight glass gland	

Overall Dimensions and Piping Connections

6HK

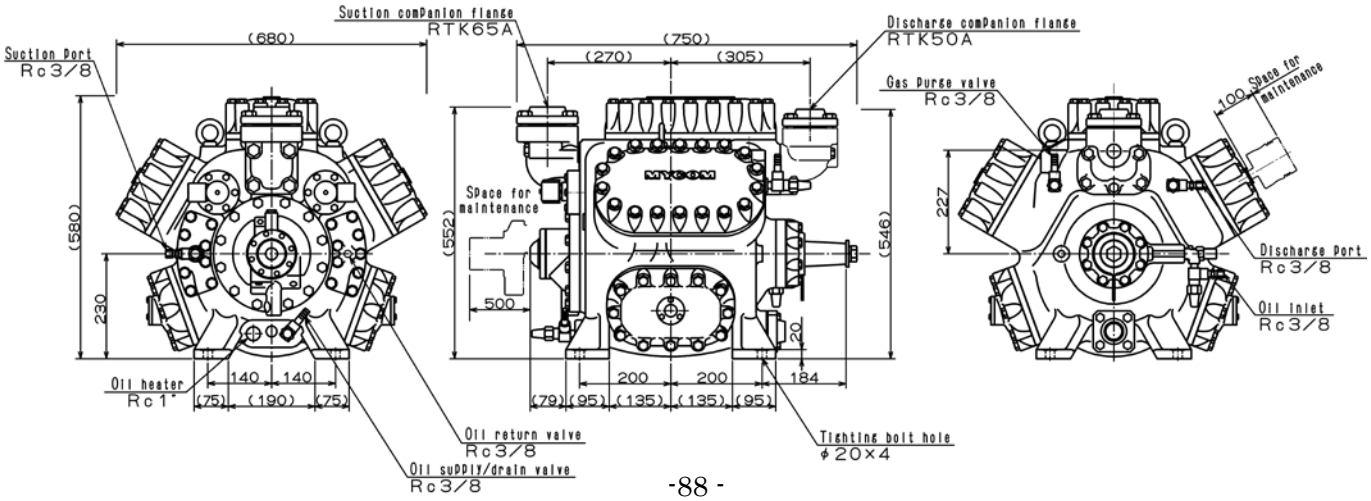

RKT025_01_2015.12

MYCOM MAYEKAWA MFG. CO., LTD.

Corporate Office／3-14-15 BOTAN KOTO-KU,
TOKYO 135-8482, JAPAN
Tel: +81 3(3642)8181 Fax: +81 3(3643)7094